R&S®OSP
Open Switch and Control Unit
Operating Manual

1505.3896.12 – 17

Test and Measurement

Operating Manual

PAD-T-M: 3574.3259.02/01.00/CI/1/EN

ROHDE&SCHWARZ

The Operating Manual describes the following R&S®OSP models and options:

- R&S®OSP120, stock no. 1505.3009.02/.12
- R&S®OSP130, stock no. 1505.3009.03
- R&S®OSP150, stock no. 1505.3009.05/.15
- Option Module R&S®OSP-B011, stock no. 1505.4763.02
- Option Module R&S®OSP-B012, stock no. 1505.4770.02
- Option Module R&S®OSP-B101, stock no. 1505.5101.02
- Option Module R&S®OSP-B101L, stock no. 1505.5101.52
- Option Module R&S®OSP-B102, stock no. 1505.5201.02
- Option Module R&S®OSP-B102L, stock no. 1505.5201.52
- Option Module R&S®OSP-B103, stock no. 1505.5301.02
- Option Module R&S®OSP-B104, stock no. 1505.5401.02
- Option Module R&S®OSP-B106, stock no. 1505.5601.02
- Option Module R&S®OSP-B107, stock no. 1505.5901.02
- Option Module R&S®OSP-B108, stock no. 1505.5718.02
- Option Module R&S®OSP-B111, stock no. 1505.4605.02
- Option Module R&S®OSP-B111UL, stock no. 1528.1531.13/.16
- Option Module R&S®OSP-B111VL, stock no. 1515.5991.13/.16
- Option Module R&S®OSP-B112, stock no. 1505.4611.02
- Option Module R&S®OSP-B112UL, stock no. 1528.1548.11
- Option Module R&S®OSP-B114, stock no. 1505.4711.02
- Option Module R&S®OSP-B116, stock no. 1515.5827.02
- Option Module R&S®OSP-B116H, stock no. 1515.5827.40
- Option Module R&S®OSP-B119, stock no. 1515.5856.02
- Option Module R&S®OSP-B121, stock no. 1515.5504.02
- Option Module R&S®OSP-B121H, stock no. 1515.5504.40
- Option Module R&S®OSP-B122, stock no. 1515.5510.02
- Option Module R&S®OSP-B122H, stock no. 1528.1525.02
- Option Module R&S®OSP-B123, stock no. 1515.5527.02
- Option Module R&S®OSP-B124, stock no. 1515.5533.02
- Option Module R&S®OSP-B125, stock no. 1515.5540.02
- Option Module R&S®OSP-B125E/H, stock no. 1515.5540.26/.40
- Option Module R&S®OSP-B126, stock no. 1515.5556.02
- Option Module R&S®OSP-B127, stock no. 1505.4728.02
- Option Module R&S®OSP-B128, stock no. 1505.4734.02
- Option Module R&S®OSP-B129, stock no. 1517.7004.02
- Option Module R&S®OSP-B131, stock no. 1505.4740.02
- Option Module R&S®OSP-B132, stock no. 1505.4757.02
- Option Module R&S®OSP-B133, stock no. 1528.3157.02
- Option Module R&S®OSP-B136, stock no. 1522.4500.02
- Option Module R&S®OSP-B142, stock no. 1528.1048.03/.11/.12/.13
- Option Module R&S®OSP-B149H, stock no. 1528.3234.02
- Option Module R&S®OSP-B158, stock no. 4094.7300.02

The software contained in this product uses several valuable open source software packages. For information, see the "Open Source Acknowledgment" on the user documentation CD-ROM (included in delivery) or at https://www.rohde-schwarz.com/en/firmware/osp.
Rohde & Schwarz would like to thank the open source community for their valuable contribution to embedded computing.

Muehldorfstr. 15, 81671 Munich, Germany
Phone: +49 89 41 29 - 0
Fax: +49 89 41 29 12 164
E-mail: info@rohde-schwarz.com
Internet: http://www.rohde-schwarz.com/

The following abbreviations are used throughout this manual:
R&S®OSP is abbreviated as R&S OSP

Contents

Figures

1 Documentation Overview

The user documentation for the R&S OSP describes the following models and options:

R&S OSP120, stock no. 1505.3009.02/.12
R&S OSP130, stock no. 1505.3009.03
R&S OSP150, stock no. 1505.3009.05/.15
Option Module R&S OSP-B011, stock no. 1505.4763.02
Option Module R&S OSP-B012, stock no. 1505.4770.02
Option Module R&S OSP-B101, stock no. 1505.5101.02
Option Module R&S OSP-B101L, stock no. 1505.5101.52
Option Module R&S OSP-B102, stock no. 1505.5201.02
Option Module R&S OSP-B102L, stock no. 1505.5201.52
Option Module R&S OSP-B103, stock no. 1505.5301.02
Option Module R&S OSP-B104, stock no. 1505.5401.02
Option Module R&S OSP-B106, stock no. 1505.5601.02
Option Module R&S OSP-B107, stock no. 1505.5901.02
Option Module R&S OSP-B108, stock no. 1505.5718.02
Option Module R&S OSP-B111, stock no. 1505.4605.02
Option Module R&S OSP-B111UL, stock no. 1528.1531.13/.16
Option Module R&S OSP-B111VL, stock no. 1515.5991.13/.16
Option Module R&S OSP-B112, stock no. 1505.4611.02
Option Module R&S OSP-B112UL, stock no. 1528.1548.11
Option Module R&S OSP-B114, stock no. 1505.4711.02
Option Module R&S OSP-B116, stock no. 1515.5827.02
Option Module R&S OSP-B116H, stock no. 1515.5827.40
Option Module R&S OSP-B119, stock no. 1515.5856.02
Option Module R&S OSP-B121, stock no. 1515.5504.02
Option Module R&S OSP-B121H, stock no. 1515.5504.40
Option Module R&S OSP-B122, stock no. 1515.5510.02
Option Module R&S OSP-B122H, stock no. 1528.1525.02
Option Module R&S OSP-B123, stock no. 1515.5527.02
Option Module R&S OSP-B124, stock no. 1515.5533.02
Option Module R&S OSP-B125, stock no. 1515.5540.02
Option Module R&S®OSP-B125E/H, stock no. 1515.5540.26/.40
Option Module R&S OSP-B126, stock no. 1515.5556.02
Option Module R&S OSP-B127, stock no. 1505.4728.02
Option Module R&S OSP-B128, stock no. 1505.4734.02
Option Module R&S OSP-B129, stock no. 1517.7004.02
Option Module R&S OSP-B131, stock no. 1505.4740.02
Option Module R&S OSP-B132, stock no. 1505.4757.02
Option Module R&S OSP-B133, stock no. 1528.3157.02
Option Module R&S OSP-B136, stock no. 1522.4500.02
Option Module R&S OSP-B142, stock no. 1528.1048.03/.11/.12/.13
Option Module R&S®OSP-B149H, stock no. 1528.3234.02
Option Module R&S OSP-B158, stock no. 4094.7300.02

2 Preparing for Use

The following topics will help you to get familiar with the instrument and perform the first steps:

- Front Panel Tour R&S OSP120 or Front Panel Tour R&S OSP130 or Front Panel Tour R&S OSP150
- Rear Panel Tour
- Putting the Instrument into Operation

NOTICE

General Safety Instructions

Please make sure to observe the instructions of the following sections so that you cannot cause damage to the instrument or endanger people. This is of particular importance when you use the instrument for the first time. Also observe the general safety instructions at the beginning of this manual.

2.1 Front Panel Tour R&S OSP120

This chapter gives an overview of the front panel controls and connectors of the R&S OSP120 and gives all information that is necessary to put the instrument into operation and connect external devices. Notes on reinstallation of the instrument software appear at the end of the chapter.

Chapter 3.3, R&S OSP Panel Functions, of this manual provides an introduction to the operation of the instrument by means of the control program OSP Panel. For a description of the operating concept and an overview of the instrument's capabilities refer to the Instrument Functions (chapter 5).

The front panel of the R&S OSP120 consists of STANDBY switch, Status LEDs and connectors. Brief explanations on the function of these items and the rear panel can be found on the next pages.

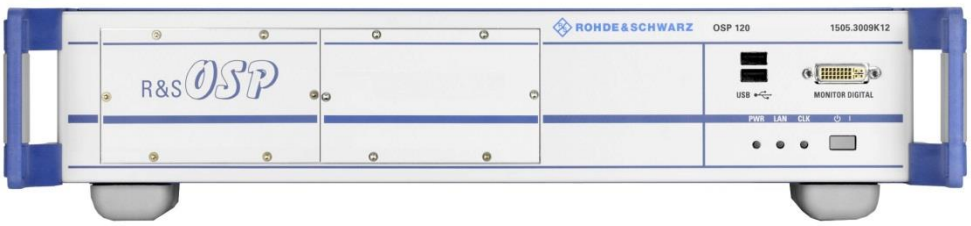

2.1.1 Status LEDs and Standby Key

The status LEDs and the standby toggle switch are located in the bottom right corner of the front panel. See also chapter 2.5.9.

The status LEDs light to indicate the following instrument states:

PWR: shows standby (yellow LED) and ready state (green LED).

LAN: shows if data are received via LAN network; see Remote Control (chapter 6).

CLK: is flashing if data are transferred via CAN bus.
On an R&S OSP150, the logic is inverted: the CLK indicator goes off shortly during CAN bus activity.

The STANDBY key serves the following purpose:

Toggle between standby and ready state (indicated by the yellow and green PWR LED, respectively).

2.1.2 Front Panel Connectors

2.1.2.1 USB Connectors

Single Universal Serial Bus connectors of type A (master USB), used to connect a keyboard or flash drive. All front panel USB connectors comply with standard USB 2.0; refer to the "Specifications".

USB Connection

The length of passive connecting USB cables should not exceed 1 m. The maximum current per USB port is 500 mA. It is recommended to use double-shielded USB cables.

2.1.2.2 Monitor Connector

An external monitor with a digital interface can be connected to the MONITOR DIGITAL connector on the front panel of the R&S OSP120. An external monitor, together with a keyboard, is a prerequisite for manual intervention in order to define the LAN configuration or in case of service to have access to the Linux Operating system.

Monitor connection:

Before the external monitor is connected, the instrument must be switched off (standby mode) to prevent damage to the monitor and the R&S OSP120. After connection, the external monitor is detected when the instrument is started. The Linux Operating system menu of the R&S OSP is then displayed on the external monitor. Further settings are not required.

It is recommended to use a double-shielded monitor cable equipped with ferrites at each end.

2.2 Front Panel Tour R&S OSP130

This chapter gives an overview of the front panel controls and connectors of the R&S OSP130 and gives all information that is necessary to put the instrument into operation and connect external devices. Notes on reinstallation of the instrument software appear at the end of the chapter.

The chapter Getting Started of this manual provides an introduction to the operation of the instrument by means of the control program OSP Panel. For a description of the operating concept and an overview of the instrument's capabilities refer to the Instrument Functions (chapter 5). The graphical user interface on the instrument is explained in chapter 5.3.

The front panel of the R&S OSP130 has the same STANDBY key and Status LEDs as the R&S OSP120. See the corresponding sections in chapter 2.1.1 for details. There is no connector for an external monitor.

2.2.1 Navigation Keys

The navigation keys allow access to the various functions of the graphical user interface. They can be subdivided into three groups.

In the top row next to the screen there are three keys to quickly access different hierarchy levels in the menus.

pressing the key MENU activates the top level menu.

pressing the key BACK moves up in hierarchy by one menu level.

pressing the key HOME leaves the menu and displays the Main menu screen

In the top row next to the screen there are three keys to quickly access different hierarchy levels in the menus.

With the cursor keys the focus is moved within the screen elements; see a detailed description in chapter 5.3.

In the top row next to the screen there are three keys to quickly access different hierarchy levels in the menus.

pressing the key FUNCTION executes a switching action, if applicable.

pressing the key OK confirms a selection, for example for going to the next menu level.

pressing the key STATUS displays status information for the chosen item (device or module) or changes the selection of a switch for path configuration.

2.2.2 Status Keys

The status keys serve the following purposes:

The OFF key is not used at the moment.

The ON key is not used at the moment.

Pressing the RESET key leaves the menu and displays the Main menu screen.

The LOCAL key is not used at the moment.

2.2.3 Status Indicators

The status indicators have the following meaning:

Error in supply voltage, please contact service.

General error condition. Please note any additional information what could have led to this condition and contact R&S if the error is reproducible.

General warning condition. Not used at the moment.

Indicates communication via the CAN interface.

Indicates communication via the CAN interface as well.

2.2.4 Front Panel USB Connectors

Single Universal Serial Bus connectors of type A (master USB), used to connect a keyboard or flash drive. All front panel USB connectors comply with standard USB 2.0; refer to the "Specifications".

USB Connection

The length of passive connecting USB cables should not exceed 1 m. The maximum current per USB port is 500 mA. It is recommended to use double-shielded USB cables.

2.3 Front Panel Tour R&S OSP150

This chapter gives an overview of the front panel controls of the R&S OSP150. The front panel of the R&S OSP150 is similar to the front panel of the R&S OSP120 having the Standby key and the three status LEDs but does not have any connector. See chapter 2.1.1 for the description of the front panel elements.

Please notice that the operation of the CLK LED is different to OSP120 and OSP130.

2.4 Rear Panel Tour

This section gives an overview of the rear panel connectors of the R&S OSP120. The rear panels of the R&S OSP130 and of the R&S OSP150 are almost identical to it.

The rear connectors and interfaces are described in detail in the complete operating manual. The following connectors are available on the instruments:

LAN connector (RJ-45) is used to integrate the instrument to a Local Area Network, primarily for remote control purposes. This connector is not available on the R&S OSP150.

CAN bus connector (D-Sub, 9 pin) is a control port to connect one or several extension units R&S OSP150.

The R&S OSP owns three slots which can be configured with the options available for the R&S OSP. The above configuration shows the following options:

Option R&S OSP-B101: Relay module consisting of six coaxial relays of SPDT type; the RF coaxial connectors are SMA type

Option R&S OSP-B102: Relay module consisting of two coaxial relays of SP6T type; the RF coaxial connectors are SMA type

Option R&S OSP-B103: I/O module with 16 Bit input / output ports; the connectors are D-Sub types, 25 pin, female for output and male for input

In case of the options which can be installed in the R&S OSP, the connectors related to each option are described in detail in chapter 9.2, R&S OSP Module Interfaces.

2.4.1 LAN Connector

8-pin LAN connector RJ-45 used to connect the R&S OSP120 or OSP130 to a Local Area Network (LAN). Refer to Remote Operation in a LAN.

LAN Connection

Depending on the connection (a non-dedicated network connection or dedicated connection to a single controller) a standard RJ-45 cable or cross-over RJ-45 cable is required. See chapter 2.9.1 for further information.

It is recommended to use double-shielded LAN cables of category 6 (SSTP).

2.4.2 CAN Bus Connector

9-pin connector D-Sub male used to connect the R&S OSP120 or R&S OSP130 to extension units R&S OSP150. Refer to Instrument Functions in chapter 5.

NOTICE

Maximum input levels

The maximum input levels and voltages of the input connectors at the front and rear panel must not be exceeded.

CAUTION

Supply Voltage over CAN bus

In some CAN bus applications the R&S OSP120, OSP130 or OSP150 is required to deliver the supply voltage to an external device. An example for this is the connection of the fiber-optic extender R&S OSP-Z104. Using the cable OSP-Z106 is recommended for this case.

However, when connecting an R&S OSP150 to an OSP120 or OSP130, this supply voltage line must not be present. Using the connecting cables R&S OSP-Z101 or R&S OSP-Z102 is recommended. Not observing these precautions may damage the power supplies in the R&S OSP.

See also chapter 9.1.2.1 for the pinout of the CAN bus connector.

2.4.3 Mains Switch and Connector

The mains connector is located at the bottom left corner of the rear panel.

Next to the connector is a mains fuse, and above the fuse the mains switch. With the positions “0” the instrument is disconnected from mains, and in position “1” it is connected. See chapters 2.5.6 and 2.5.7 for more information.

2.5 Putting the Instrument into Operation

This section describes the basic steps to be taken when setting up the R&S OSP for the first time.

NOTICE

Instrument setup

Before turning on the instrument, please make sure that the following conditions are fulfilled:

Instrument covers are in place and all fasteners are tightened.

Fan openings are unobstructed.

Signal levels at the input connectors are all within the specified ranges.

Signal outputs are correctly connected and not overloaded.

The instrument is dry and shows no condensation.

Non-observance may cause damage to the instrument or other devices in the test setup.

2.5.1 Unpacking the Instrument and Checking the Shipment

Remove the instrument from its packaging and check the equipment for completeness using the delivery note and the accessory lists for the various items.

First, pull off the polyethylene protection pads from the instrument's rear feet and then carefully remove the pads from the instrument handles at the front.

Pull off the corrugated cardboard cover that protects the rear of the instrument.

Carefully unthread the corrugated cardboard cover at the front that protects the instrument handles and remove it.

Check the instrument for any damage. If there is damage, immediately contact the carrier who delivered the instrument. In this case, make sure not to discard the box and packing material.
It is advisable to keep the original packing material in order to prevent control elements and connectors from being damaged in case the instrument is to be transported or shipped at a later date.

2.5.2 Instrument Setup

The R&S OSP is designed for use under laboratory conditions, either on a bench top or in a rack. The general ambient conditions required at the operating site are as follows:

The ambient temperature must be in the ranges specified for operation and for compliance with specifications (see "Specifications").

All fan openings including the rear panel perforations must be unobstructed. The distance to the wall should be at least 10 cm.

2.5.3 Bench Top Operation

If the R&S OSP is operated on a bench top, the surface should be flat.

The instrument is used in horizontal position, standing on its feet.

2.5.4 Mounting in a 19" Rack

The instrument can be mounted in 19" racks using a ZZA-211 adapter (order number 1096.3260.00). Please note the mounting instructions supplied with the rack adapter.

NOTICE

Allow for sufficient air supply in the rack.

Make sure that there is sufficient space between the ventilation holes and the rack casing.

2.5.5 EMI Protective Measures

In order to avoid electromagnetic interference (EMI), the instrument may only be operated when it is closed and with all shielding covers fitted. Only appropriate shielded signal and control cables may be used.

2.5.6 Connecting the Instrument to the AC Supply

The R&S OSP is automatically adapted to the AC supply voltage supplied. The supply voltage must be between 100 V and 240 V with frequencies ranging from 50 Hz to 60 Hz (see also the tolerances quoted in the "Specifications"). The mains connector is located in the lower left corner of the rear panel.

► Connect the instrument to the AC power source using the AC power cable delivered with the instrument.

The maximum power consumption of the instrument depends on the installed options. The typical power consumption is also listed in the "Specifications".

The R&S OSP is protected by two fuses located in the fuse holder below the AC power switch; see Replacing Fuses.

2.5.7 Power on and off

The mains connector is located at the bottom left corner of the rear panel.

To turn the power on or off, press the AC power switch to position I (On) or 0 (Off).

See also Replacing Fuses.

After power-on, the R&S OSP instrument is in ready state after about 30 seconds.

The STANDBY key at the front panel of the instrument is used to toggle between standby and ready state. The AC power switch can be permanently on.

Switching off is required only if the instrument must be completely removed from the AC power supply but may be used in order to reduce power consumption when not in use.

Extension units

If communication between OSP120 or OSP130 and any extension unit OSP150 connected via CAN bus cannot be established properly, try to turn on the extension unit(s) first before turning on the OSP120 or OSP130.

2.5.8 Replacing Fuses

The instrument is protected by two fuses (IEC 127- T4.0H/250V, stock no. 0020.7600.00) located in the fuse holder below the AC power switch on the rear panel.

WARNING

Shock hazard

For fuse replacement, ensure that the instrument is switched off and disconnected from the power supply by removing the plug from the AC power connector.

To replace the fuses

1. Open the lid of the AC power connector.
2. Lift the fuse holder out of its slot.
3. Exchange the fuses.
4. Put the fuse holder back in its slot and close the lid.

2.5.9 Standby and Ready State

The STANDBY toggle switch is located in the bottom right corner of the front panel.

After switching on the AC power, the R&S OSP is in ready mode after about 30 seconds.

Press the STANDBY key on the front panel briefly to switch the R&S OSP from the standby to ready state or vice versa.

In standby state, the left PWR LED is yellow. The standby power only supplies the power switch circuits. In this state it is safe to switch off the AC power and disconnect the instrument from the power supply.

After Power On or when changing from Standby to Ready state, the left PWR LED is immediately switched to green and all modules are power-supplied. Please note that the Linux operating system of R&S OSP takes about 30 seconds to start up. After this time the R&S OSP is ready for operation.

CAUTION

Shock hazard

The instrument is still power-supplied while it is in standby mode.

2.6 Maintenance

The R&S OSP does not require any special maintenance. Make sure that the air vents are not obstructed. The outside of the instrument is suitably cleaned using a soft, non-fluffy dust cloth.

NOTICE

Instrument damage caused by cleaning agents

Cleaning agents contain substances that may damage the instrument, e.g. solvent-containing cleaning agents may damage the front panel labeling or plastic parts. Never use cleaning agents such as solvents (thinners, acetone, etc), acids, bases, or other substances.

For our support center address and a list of useful R&S contact addresses refer to the pages at the beginning of this manual.

2.6.1 Storing and Packing

The R&S OSP can be stored at the temperature range quoted in the data sheet. When it is stored for a longer period of time the instrument should be protected against dust.

The original packing should be used, particularly the protective caps at the front and rear, when the instrument is to be transported or dispatched. If the original packing is no longer available, use a sturdy cardboard box of suitable size and carefully wrap the instrument to protect it against mechanical damage.

2.7 Connecting External Accessories

The LAN interface at the rear panel of the R&S OSP120 or OSP130 is used for remote control of the instrument:

- A LAN connection can be established in order to remotely control the instrument from an external PC (see Connecting a LAN Cable).

In addition the R&S OSP120 provides interfaces for monitor connection and USB connection:

- An external monitor shows the menus of the Linux Operating System, if any access or setup within the Linux Operating System should be necessary.
- A keyboard simplifies the entry of data (see Connecting a Keyboard).
- A flash drive supports the firmware update (see Connecting a USB Flash Drive).

2.7.1 Connecting a USB Flash Drive

A USB flash drive can be connected to one of the USB Connectors on the front panel of the R&S OSP120 or OSP130.

The flash drive is detected automatically when it is connected.

2.7.2 Connecting a Keyboard

A keyboard can be connected to one of the USB Connectors on the front panel of the R&S OSP120.

The keyboard is detected automatically when it is connected. The default input language is English – US. Refer to chapter 2.10.1 for changing the keyboard properties.

Keyboard configuration

The keyboard configuration already is pre-configured.

Operating the R&S OSP120 does not require a keyboard. Usually all essential functions can be controlled via LAN interface.

2.7.3 Connecting a Monitor

A standard monitor can be connected to the DVI-D connector on the front panel of the R&S OSP120.

Monitor configuration

There is no particular configuration of the monitor required.

Operating the R&S OSP120 does not require a monitor. Usually all essential functions can be control via LAN interface.

NOTICE

Monitor connection

The monitor must be connected while the instrument is switched off (in standby mode). Otherwise correct operation can not be guaranteed.

The monitor displays the menus of the Linux Operating System which is integral part of the R&S OSP120. The monitor together with keyboard is required if any setups / changes have to be done in the Linux operating system.

2.7.4 Connecting a LAN Cable

A LAN cable can be connected to the LAN connector on the rear panel of the R&S OSP120 or OSP130. To establish a LAN connection proceed as follows:

Refer to chapter Assigning an IP Address and learn how to avoid connection errors.

Connect an appropriate LAN cable to the LAN port. Use a commercial RJ-45 cable to establish a non-dedicated network connection, or a cross-over RJ-45 cable to establish a dedicated connection between the instrument and a single PC.

Dedicated vs. non-dedicated network connections

There are two methods to establish a LAN connection of the R&S OSP:

- A non-dedicated network (Ethernet) connection from the instrument to an existing network made with an ordinary RJ-45 network cable. The instrument is assigned an IP address and can coexist with a computer and with other hosts on the same network.
- A dedicated network connection between the instrument and a single computer made with a cross-over RJ-45 network cable. The computer must be equipped with a network adapter and is directly connected to the instrument. The use of hubs, switches, or gateways is not needed, however, data transfer is still made using the TCP/IP protocol.

2.8 Starting the R&S OSP and Shutting Down

To start the R&S OSP, proceed as follows:

- Make sure that the instrument is connected to the AC power supply and switch the power switch (see chapter 2.5.7) on the rear panel to position I (On). All modules of the R&S OSP are powered (the left PWR LED is green) and after about 30 seconds the instrument is in ready state.
- If necessary, press the STANDBY toggle switch (see chapter 2.5.9) on the front panel to switch the instrument to ready state (the left PWR LED is green).
- In ready state, the instrument already has booted the Linux Operating System (see chapter 2.10) and started the R&S OSP application. Independent of the last setup, the R&S OSP always starts with the default conditions, i.e. all relays in reset condition.

To shut down the R&S OSP, proceed as follows:

- Press the STANDBY key, which will shut down the Linux operating system and set the instrument to standby state.
- If desired, set the AC power switch to position 0 (Off).

NOTICE

Standby state

It is recommended to switch the R&S OSP to standby state before disconnecting it from the AC supply.

2.9 Remote Operation in a LAN

A LAN connection is used to integrate the R&S OSP (not the OSP150) into a home/company network. The LAN connection is required for:

- Remote control operation of the R&S OSP120 or OSP130.
- Manual control of the R&S OSP from a remote computer using the "OSP Panel" application.

To establish the connection proceed as follows:

- Assign an IP address to the R&S OSP following the directions below and connect the instrument to the network as described in chapter 2.7.4, Connecting a LAN Cable.

2.9.1 Assigning an IP Address

There are two different modes for the OSP LAN configuration. The OSP as it is delivered works in the LAN configuration as described in chapter 2.9.1.1.

With OSP firmware version 2.51 onwards, the OSP LAN configuration can be setup as described in chapter 2.9.1.2.

The actual LAN configuration can be read out from the OSP by the following SCPI command:

SYSTem:NETWork:MODe?

2.9.1.1 Default mode of LAN Configuration

The actual LAN configuration is set to mode -> DHCP_AUTO

Depending on the network capacities, the IP address information for the R&S OSP120 or R&S OSP130 can be obtained in different ways.

- If the network supports dynamic TCP/IP configuration using the Dynamic Host Configuration Protocol (DHCP), all address information can be assigned automatically.
- If the network does not support DHCP, or if the instrument is set to use alternate TCP/IP configuration, a static IP address is used.

By default, the R&S OSP is configured either to use:

- A dynamic TCP/IP configuration and obtain all address information automatically. This means that it is safe to establish a physical connection to the LAN without any previous R&S OSP configuration.
  (Priority 1)
- A user defined static IP address. This address can be defined (but must not) in addition to the default address. See chapter 3.3.3 for information how to configure the user defined IP address via the OSP Panel application.
  (Priority 2)
- A static default IP address. Per default, the R&S OSP is set to the IP address 192.168.48.147. See also chapter 3.1.
  (Priority 3)

Please note the priorities shown above which is related to IP address handling done by the OSP.

NOTICE

Valid IP addresses

If your network does not support DHCP, or if you choose to disable dynamic TCP/IP configuration, you must assign valid address information before connecting the R&S OSP to the LAN. Contact your network administrator to obtain a valid IP address, because connection errors can affect the entire network.

Reading the IP address

When using the dynamic TCP/IP configuration, the actual IP address information will be displayed when booting the R&S OSP. Proceed as follows:

Connect the R&S OSP via a commercial RJ-45 cable to your network supporting DHCP

Switch on the R&S OSP120 with Monitor and Keyboard connected (not applicable to the OSP130)

At the end of the booting process, the IP address will be displayed as shown below for the OSP120 and the OSP130. The values of the IP address shown are only examples.

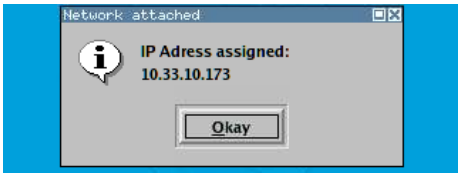

Press Okay button or the ENTER key on the keyboard (OK key for the R&S OSP130) for confirmation and to continue the operation.

Manual TCP/IP configuration

If your network does not support DHCP, proceed as follows:

1. Connect the R&S OSP120 or OSP130 via a cross-over RJ-45 cable to your computer (or network not supporting DHCP).
2. Set the network configuration of your computer to work with a static IP address. The following setup is recommended:

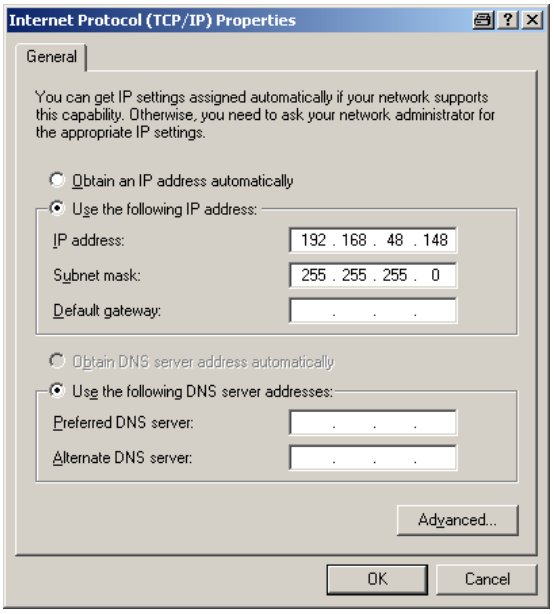

3. Switch on the R&S OSP and wait until boot-up is finished.

The R&S OSP now can be accessed under its default IP address from your computer.

2.9.1.2 Specific mode of LAN Configuration

The R&S OSP120 can be configured to enable gateway routing.

The actual LAN configuration is set to mode -> DHCP-STATIC

The LAN configuration can be setup using the OSP Panel application. See chapter 3.3.3.

The change over to DHCP-STATIC mode is achieved by the following SCPI command:

SYSTem:NETWork:STATic "<IpAddr>","<Netmask>","<Gateway>".

2.9.2 R&S OSP Panel

The R&S OSP120 has no elements for front panel operating. A “manual” operation is achieved via the R&S application OSP Panel.

"OSP Panel" is a Windows application which can be used to access and control the R&S OSP120 or the OSP130 from a remote computer through a LAN connection. The OSP Panel allows full access to all R&S OSP functions.

To start the OSP Panel connection

4. Connect the R&S OSP to a LAN and determine its IP address; see Remote Operation in a LAN. It is necessary to have a VISA library installed on your computer.
5. Install the OSP Panel application on your computer (connected to the LAN). The VISA libraries which are necessary for running the OSP Panel are available on a separate disc (NI-VISA I/O Library)..
6. Start the OSP Panel, specify the correct IP address in the OSP Panel, and the R&S OSP can be manually controlled.

For detailed information about OSP Panel refer to the chapter 3.3 R&S OSP Panel Functions.

2.10 Linux Operating System

The R&S OSP is equipped with a Linux operating system which has been configured according to the instrument's features and needs. Changes in the system configuration can be necessary in order to

- Establish a LAN connection.
- Customize the properties of the keyboard connected to the R&S OSP120.
- Call up additional software tools.

NOTICE

Configuration of the operating system, updates

The operating system is adapted to the R&S OSP. To avoid impairment of instrument functions, only change the settings described in this manual. Existing software must be modified only with update software released by Rohde & Schwarz. Likewise, only programs authorized by Rohde & Schwarz for use on the instrument must be executed.

2.10.1 Keyboard Properties

The keyboard properties can be changed via the console of the Linux Operating System. To customize the keyboard properties, perform the following steps:

1. Switch off the R&S OSP.
2. R&S OSP120: Connect the external monitor and keyboard to the R&S OSP120 and switch on the instrument. The messages of the Linux boot process are displayed on the monitor. Wait until the boot process is finished (takes about 30 seconds) and press the <ENTER> key.
3. R&S OSP130: Connect the external keyboard to the R&S OSP120 and switch on the instrument. Wait until booting is complete. Change from regular display to Linux system login by pressing the keys CTRL + ALT + F3.
4. When asked for the login, use the login name root and the password root.

To change the keyboard properties to German, type <de> and conform with the <ENTER> key. The keyboard properties will be kept until the instrument is switched off. After booting of the instrument, the default keyboard configuration (English US) is set up again.

2.11 Firmware Update

This chapter contains information on firmware update and Linux operating system update to the R&S OSP120 or OSP130.

NOTICE

Possible impairment of the functioning of the instrument

The instrument is equipped with the Linux operating system. It is thus possible to install COTS software in the instrument. The use and installation of commercial off-the-shelf (COTS) software may impair the instrument function. For this reason, we recommend that you only execute programs tested by Rohde & Schwarz with regard to their compatibility with the instrument software. In certain cases, the use of these programs can impair the performance of the instrument.

The drivers and programs used in the instrument under Linux have been adapted to the test instrument. Existing instrument software must only be modified with update software released by Rohde & Schwarz.

The firmware update packages for the R&S OSP120 and OSP130 are integrated in a single setup file "OSP<xxx>.rsu" (<xxx> denotes the version of the firmware update). Firmware updates as well as the Release Notes describing the improvements and modifications are provided on the Internet at the download site of the R&S OSP homepage.

The installation of a new firmware version is performed via the USB interface. A de-installation of the old firmware is not necessary. The firmware update is performed while the instrument is running. The new firmware will be loaded right after the update process.

To perform a firmware update, perform the following steps.

1. The update file has to be downloaded from the Internet to a PC. From there the file should be transferred to a USB flash drive which will later be plugged into the USB interface of the R&S OSP.
2. Connect the external monitor and keyboard to the R&S OSP120 and switch on the instrument. Wait until booting is complete.
3. Connect the USB flash drive to one of the two USB interfaces on the R&S OSP front panel. If the instrument recognizes a flash drive at its USB interface, and finds valid update versions, the Software Update Process is started. Press the Yes button (OK key on OSP130) to continue

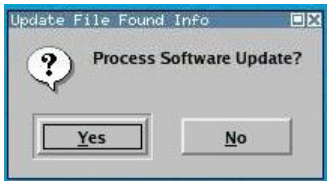

All update versions (files with extension .rsu) stored on the flash drive now are offered for selection. Thus, an upgrade or downgrade of the firmware is possible at any time. Select the required firmware update version and press the OK button.

NOTICE

It is recommended not to switch off the instrument or to remove the USB flash drive while the firmware update is running.

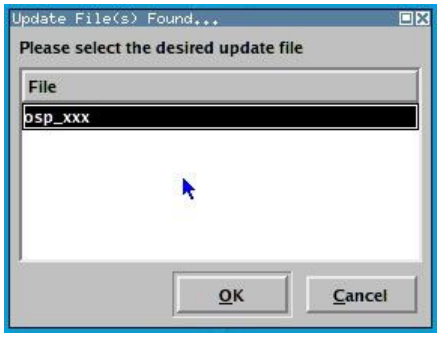

If the software update is complete, the USB flash drive has to be removed. A message box is coming up to confirm the removal of the flash drive . After confirmation the instrument starts rebooting.

The R&S OSP is now ready to operate with the new firmware version.

Before using the R&S OSP, repeat the registration process. See chapter 3.3.2 for details.

CAUTION

Firmware Update:

The firmware update is not allowed to be performed running the GUI via Web-Browser and VNC. Doing this will abort the firmware installation procedure!

2.12 Read the actual Firmware Version

The currently installed firmware version of the different R&S OSP units can be read in several ways as described in the following chapters.

2.12.1 Get Firmware Version using R&S OSP Panel

The firmware versions of all OSP models can be read using the application OSP Panel. Start the OSP Panel and select the function >File >System Info.

This function displays the OSP System information together with the actual Firmware version. The Firmware version is shown in the OSP Identification string as highlighted in the following example (Version 1.5).

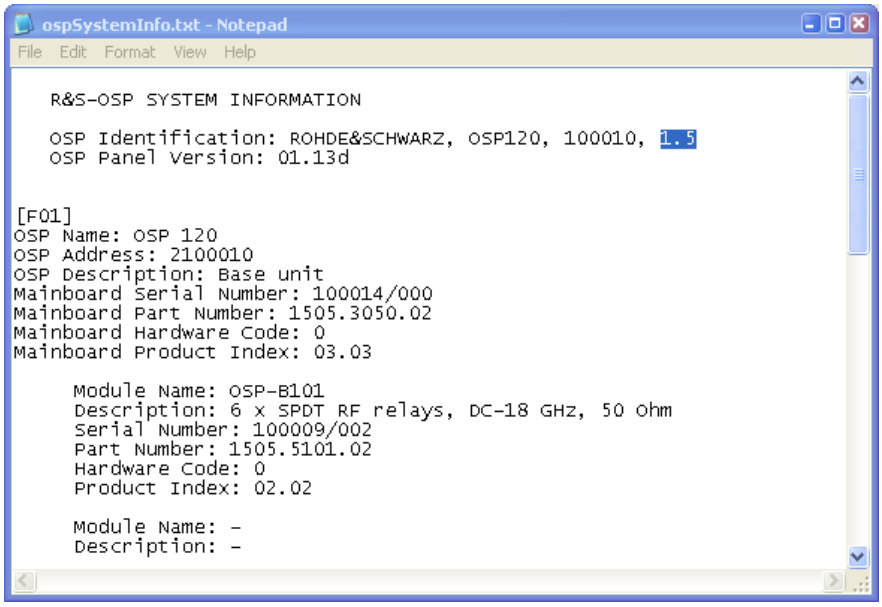

2.12.2 Get Firmware Version via SCPI Command

In remote mode the current OSP Firmware Version can be read via the “*IDN?” command. When sending the Identification command, the OSP prompts back the following answer (example for OSP120) after pressing the Read button (see below example).

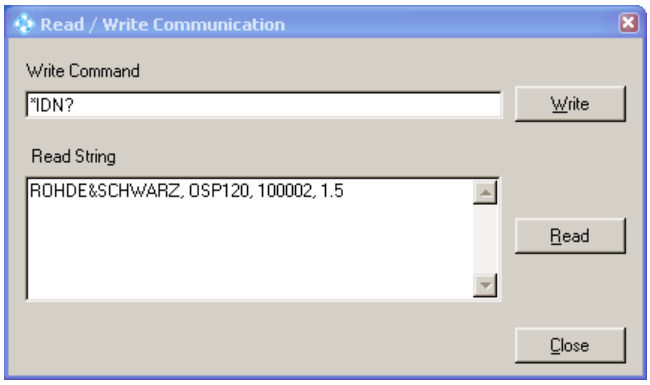

The last part of the string shows the actual firmware version (1.5 for the above example).

With Firmware version 2.51 onwards, the actual version of the OSP is read-out in the configuration string, too.
See below example for OSP120 with Ser. No. 100008 and Var 02:

*Rohde&Schwarz, OSP120, 100008, **Var02**, 2.51*

With Firmware version 2.57 onwards, the firmware version of the OSP is read-out with additional date label.
See below example for OSP120 with Ser. No. 100008, Var 02 and date 2016, June 14th:

*Rohde&Schwarz, OSP120, 100008, **V02**, 2.57.160614*

3 Getting Started

This chapter helps you to get familiar with the R&S OSP and explains how to solve basic tasks that you will frequently encounter when working with the instrument.

You can control the basic switching tasks and define paths with the graphical user interface (GUI). A more comfortable approach is using the separate OSP Panel software. It allows to configure the R&S OSP and to get more information about the device, its modules and relays.

R&S®OSP model	Manual operation ...	Figure / Chapter
R&S OSP120 without display	... with monitor and keyboard (GUI)	Figure 3-1 / Chapter 4 and Chapter 5.3.1
R&S OSP130 with display	... direct control via front display and panel keypad (GUI)	Figure 3-2 / Chapter 4 and Chapter 5.3.1
R&S OSP120 and R&S OSP130	... via Ethernet connection between OSP and laptop/PC (Web-GUI via VNC or OSP Panel)	Figure 3-3 / Chapters 3.1, 3.7.1, 5.3.1 (Web-GUI), 3.2 to 3.3 (OSP Panel)

Since the R&S OSP120 only has remote control capability, the manual operation of the instrument is achieved either via a connected keyboard, mouse and monitor or via the application OSP Panel, which runs on an external computer connected to the same LAN network as the R&S OSP120.

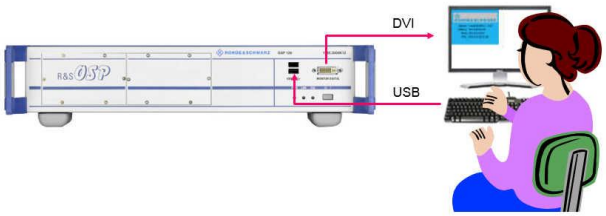

Figure 3-1: Manual operation of R&S OSP120 using GUI

For manual control of the R&S OSP130, you can use the internal display and keypads. As an alternative, you can use a keyboard and mouse, see Figure 3-2.

Figure 3-2: Manual operation of R&S OSP130 using the GUI

Both base units R&S OSP120 and R&S OSP130 can be controlled via LAN interface by Web-GUI (VNC required) or by the application software OSP Panel, Figure 3-3.

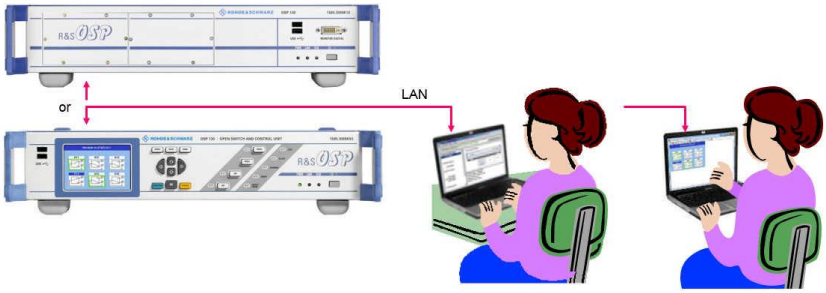

Figure 3-3: Operation of R&S OSP120/130 by OSP Panel software or Web-GUI

Chapter 3.2 gives a short overview on the OSP Panel operation via LAN:

- Installing the R&S OSP Panel
- R&S OSP Panel Functions
- Sample Session

CAUTION

Risk of shock hazard and instrument damage

Before starting any measurement on your R&S OSP, please note the instructions given in chapter 2 Preparing for Use.

In chapter 4, Manual Operation, you find information on customizing the instrument according to your personal preferences.

Chapter 8 also provides information on typical applications of the R&S OSP platform.

In the following, we assume that you are familiar with standard Windows dialogs and mouse operation.

3.1 Connecting R&S OSP and PC

Please read chapter 2.9.1 for understanding the possibilities of IP address assignments. The following setup describes the connection of the R&S OSP120 or R&S OSP130 within a dedicated network; i.e. the connection to a single computer, in case you are not using the dynamic TCP/IP configuration (DHCP).

When using the dynamic TCP/IP configuration (DHCP), these steps are not required.

To set up a LAN connection, proceed as follows:

- Connect the R&S OSP to the computer using a cross-over RJ-45 cable:
  Ensure that the network configuration of the computer is set to the required protocol. Select >Settings >Control Panel >Network Connections. Select the properties of the active interface, then the properties of the TCP/IP protocol, and set the following IP address:

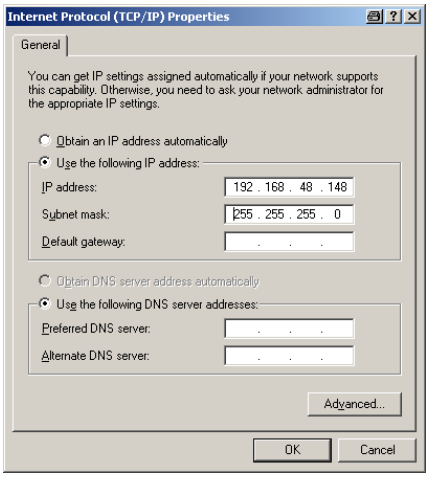

- The R&S OSP is configured by default to IP address **192.168.48.147**.
  This address is to be entered in the OSP Panel application when using the examples described in the following chapters.

When a static IP address other then the default address is required, it can be changed using the OSP Panel. See chapter 3.3.3 for detailed information.

3.2 Installing the R&S OSP Panel

The OSP Panel installation setup is available on CD which is part of the R&S OSP delivery.

The installation setup includes the VISA libraries which are necessary for running the OSP Panel.

To install the application, proceed as follows:

- Insert the documentation CD on the disk drive of your computer.
- Select the directory “OSP Panel” on the CD, select the file setup.exe and press the <ENTER> button to start the installation.
- If the installation is complete, confirm and exit the installation program.

3.3 R&S OSP Panel Functions

The following sections can help you to make efficient use of the OSP Panel, which is the application for manual control of the R&S OSP120 and may also be used in connection with the R&S OSP130. The OSP Panel offers the following features:

- Configuration of the IP address
- Dialogs to control the different options configured in the R&S OSP
- Definition of path configurations
- Direct access to SCPI commands

The following examples are based on the assumption that the IP address has been obtained dynamically to be 10.33.10.173.

3.3.1 Configuring/Connecting R&S OSP Panel

When starting the OSP Panel, no instrument is connected via LAN network. The OSP Panel is in simulation mode and the following dialog appears:

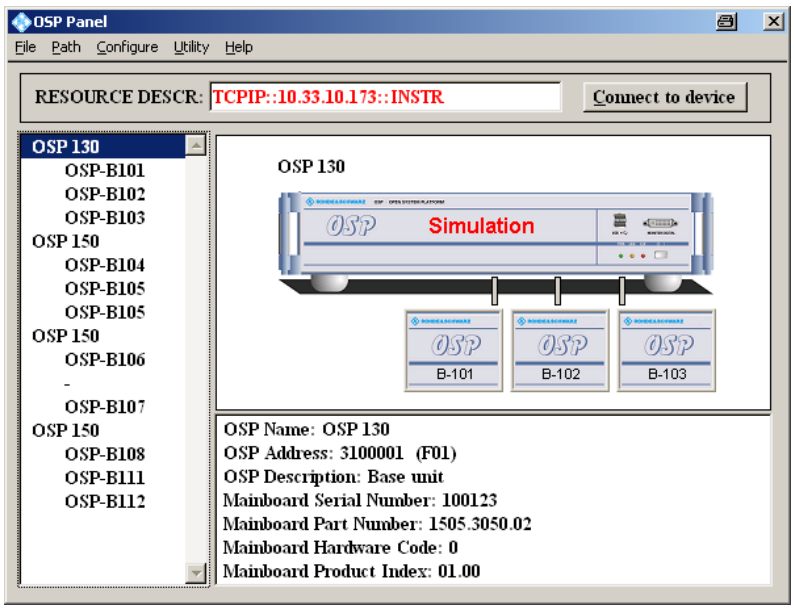

The R&S OSP remains in simulation mode as long as no connection to an instrument via LAN is performed.

To connect an R&S OSP via LAN, perform the following steps:

1. Get the actual IP address as described in chapter 3.1 and enter the address in the input field RESOURCE DESCR.

2. Press the "Connect to device" button at the upper right corner of the OSP Panel dialog to connect the instrument.

If your computer is equipped with a firewall function, it may be necessary to allow the firewall to unlock the OSP Panel. Here is an example of such a firewall message:

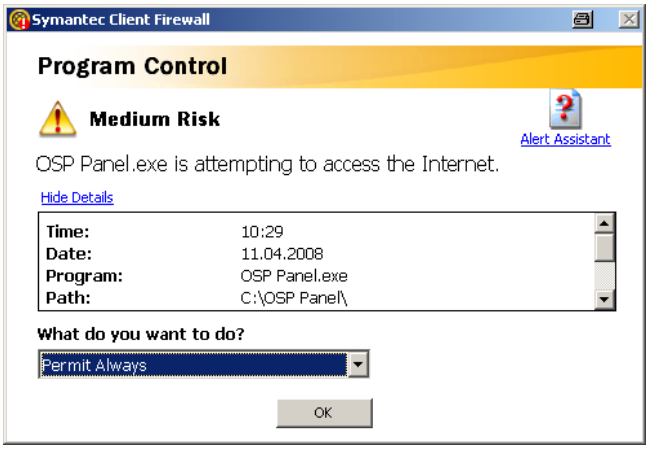

It is recommended to allow free access to Internet for the OSP Panel.

If the LAN connection is established, the R&S OSP device found on the LAN network is displayed in the left field together with the installed options.

Note that it is necessary to register the R&S OSP once, if the instrument is switched on for the first time or if the configuration has changed or if a firmware update has been made. See chapter 3.3.3 for further information. See also chapter 8.2 for actions related to extensions with an OSP150.

In the below example, an R&S OSP130 Device is found on the network which is equipped with three modules R&S OSP-B101, R&S OSP-B104 and R&S OSP-B102. Furthermore, to this device an R&S OSP150 is connected which is equipped with three modules R&S OSP-B101, R&S OSP-B102 and R&S OSP-B103.

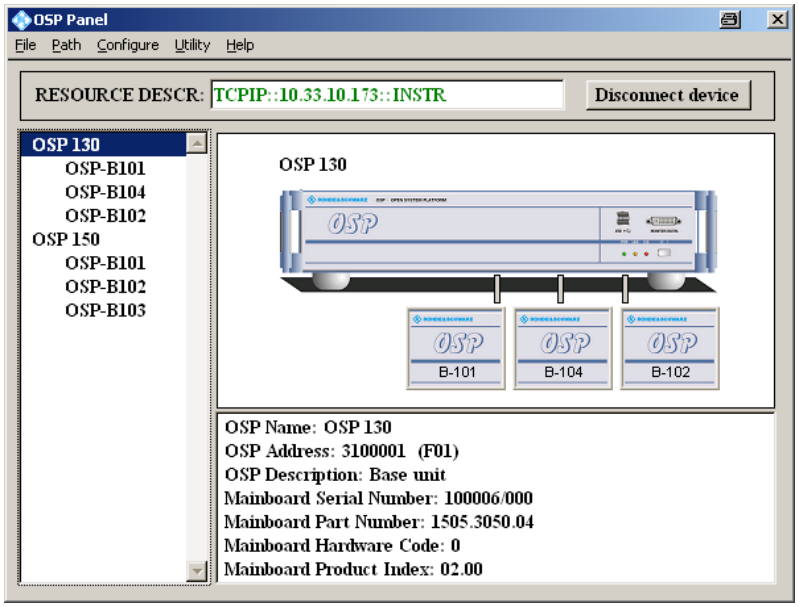

3.3.2 Addressing R&S OSP Device

Select the R&S OSP device in the left field of the OSP Panel dialog.

In the lower right field of the OSP Panel dialog additional information on the R&S OSP is displayed as follows:

OSP Name: OSP 130
OSP Address: 3100001 (F01)
OSP Description: Base unit
Mainboard Serial Number: 100006/000
Mainboard Part Number: 1505.3050.04
Mainboard Hardware Code: 0
Mainboard Product Index: 02.00

OSP Name	Shows the model of the OSP; i.e. OSP130
OSP address	The device address is read back from the OSP flash memory. The first OSP device (the device which can be addressed via LAN interface) in a system is preferably defined as Device F01. The R&S OSP address is composed out of the R&S OSP version (last digit of the R&S OSP Ident Number) and the R&S OSP serial number (6 digit number): Version: xxxx.xxxxK03 Serial Number: 100001 The above example results in R&S OSP address → 3100001
OSP Description	Base unit (OSP120, OSP130) or Extension unit (OSP150)
Mainboard Serial Number:	The serial number read back from the R&S OSP Mainboard is displayed.
Mainboard Part Number	The part number read back from the R&S OSP Mainboard is displayed.
Mainboard Hardware Code	The hardware code read back from the R&S OSP Mainboard is displayed.
Mainboard Product Index	The product index read back from the R&S OSP Mainboard is displayed.

OSP device

Note that no functions can be set selecting the R&S OSP Device. For the R&S OSP Device only the additional information as listed above can be read.

OSP address

If an R&S OSP is set up for the first time, it is necessary to register the R&S OSP address once. Otherwise it may happen that the R&S OSP is correctly detected but no modules are indicated.

To register the R&S OSP proceed as follows:

3. Connect the instrument via LAN with the computer, where the OSP Panel is running (see chapter 3.3.1)
4. Start the OSP Panel, set the correct IP address, and select Connect to device.
5. Select **>Configure >System** in the OSP Panel.

The following dialog allows to register the R&S OSP:

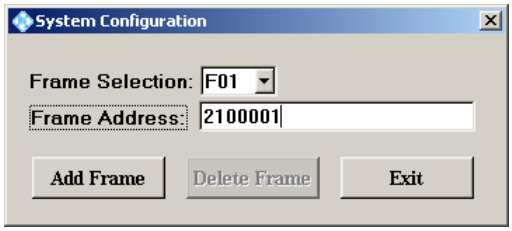

The OSP device which is connected to the LAN network is recommended to be defined as device F01 indicating the first OSP device connected with this IP address. Up to 9 instruments can be connected to the same IP address. They are distinguished by different frame numbers from F01 to F09.

1. Use the drop-down list to set the device number to F01.

2. Type in the device address

   The OSP address is composed out of the OSP version (last digit of the OSP part number) and the OSP serial number (6 digit number): The information of the OSP version and the serial number can be found on the serial number label above the mains switch on the OSP's rear side:

Use the drop-down list to set the device number to F01.

Version (OSP120): xxxx.xxxxK02

Serial Number: 100001

The above example results in OSP address → 2100001

3. Pressing the Add Frame button sends a corresponding command to the R&S OSP and the information is stored on the OSP flash memory.

The next time the OSP Panel is started and connected to the R&S OSP, the correct device information is read back from the OSP flash memory and all available R&S OSP modules are listed correctly.

Configuration changes

Whenever the configuration has changed by adding or removing OSP150 extension units, you must repeat registration. For this purpose, remove all frames except the first one (F01), and insert them if required as new ones.

See also chapter 8.2 for extensions with an OSP150.

3.3.3 Changing the IP address with R&S OSP Panel

The OSP Panel supports the setting of the user defineable static IP address. Please note that this function is supported in OSP Panel version 2.00 onwards.
Depending on the two possibilities of the LAN configuration mode with the OSP, the following menus are offered .

3.3.3.1 LAN configuration mode DHCP_AUTO

See chapter 2.9.1.1 for more information on the LAN configuration mode.

Select the menu function >Configure >TCPIP and the following dialog is opened:

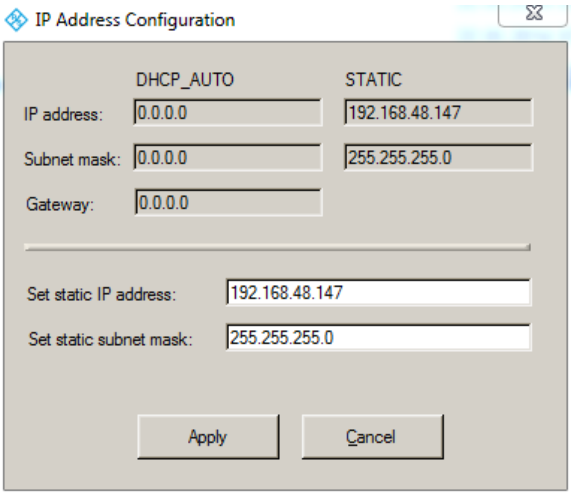

The upper half of the dialog shows the last used DHCP address and the actual static IP address.
A new user defined static IP address can be entered together with a subnet mask.

Changing of IP address

Whenever the IP address is changed via the OSP Panel and the previous one was used for OSP Panel communication, you must disconnect the OSP Panel, change the address in the OSP Panel menu and connect to the device again.

The OSP Panel outputs a corresponding message to the operator when changing the static IP address.

3.3.3.2 LAN configuration mode DHCP_STATIC

See chapter 2.9.1.2 for more information on the LAN configuration mode.

Select the menu function >Configure >TCPIP and the following dialog is opened:

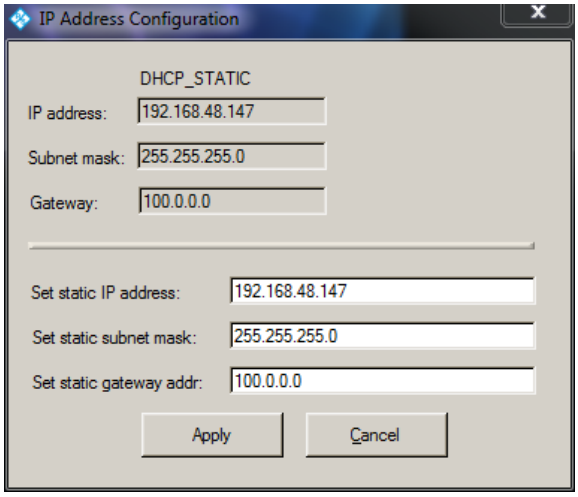

The menu allows to specify the static address together with the gateway address.

3.3.4 General Actions of R&S OSP Panel

There are several general actions which can be done from the OSP Panel.

With the menu function >Configure >Reset all switches in the connected R&S OSP are set to their default positions.

The functions >Configure >Select all Switches and >Configure >Deselect all Switches define the starting point when collecting the settings for a path configuration. See chapter 3.4 for more details.

The menu function >Utility > Re-Initialize Frames and Modules will re-establish the communication link between the R&S OSP and its modules as well as to all extension units OSP150. Switch settings are not changed.

Other actions are described in the various parts of chapters 3.3 to 3.5.

3.3.5 Addressing R&S OSP Modules

If the OSP Device is correctly registered (see previous chapter), all R&S OSP modules available are displayed in the OSP Panel dialog. To control the R&S OSP modules, the following ways are possible:

1. Select the required module displayed in the left field of the OSP Panel dialog.
   or
2. Select the diagram of the required module in the upper right field of the OSP Panel dialog.

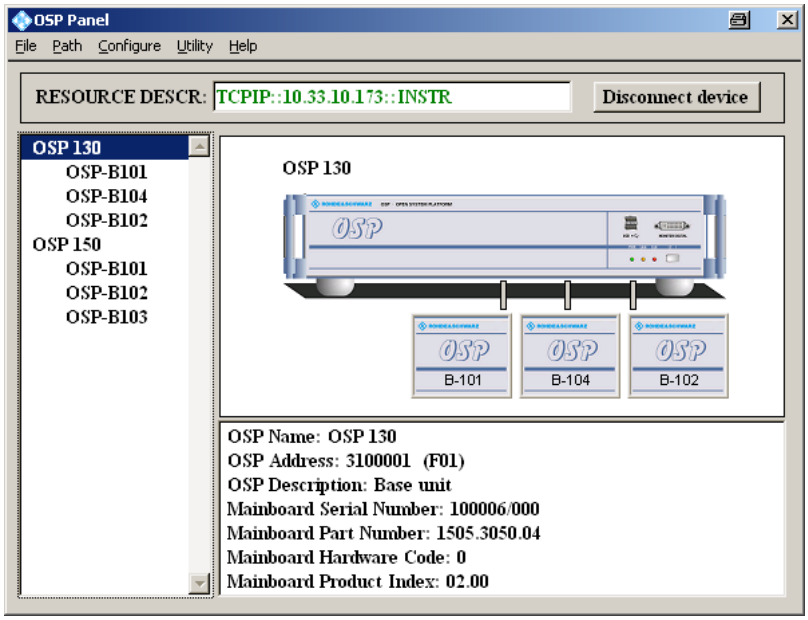

By double-clicking the required R&S OSP module, a window is opened which shows all the setup functions available for the selected module. The title line of that window also indicates the slot where this module is placed, or both slots if the module has double width (see also chapter 5.1.2). See the following chapters for the dialogs of the different R&S OSP modules.

R&S OSP module configuration

If modules are configured in the R&S OSP but no modules are detected by the OSP Panel (indicated in blue), please check that the R&S OSP device is registered correctly. Refer to chapter 3.3.2 to register the R&S OSP device.

3.3.6 Controlling the R&S OSP-B101/-B106/-B107/-B111/-B127/-B132

The module R&S OSP-B101 contains six RF switches of SPDT type. After selecting the module, a dialog is opened as shown below:

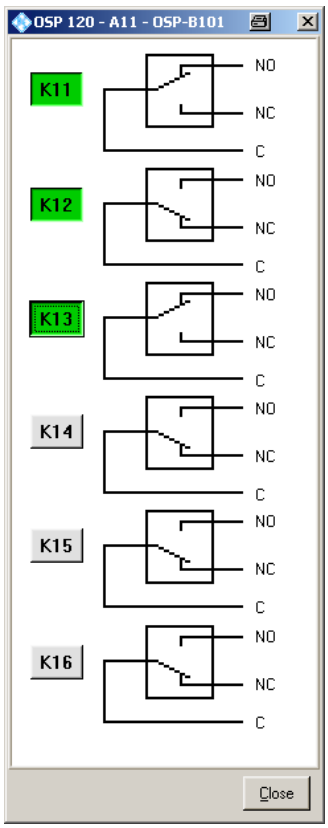

Clicking to the symbol of the relay, the position of each relay can be toggled individually.

SPDT switch

Note that the terminal NC assigns the Normally Closed position. When the relay is not activated, terminal NC is connected to terminal C.
The terminal NO is the Normally Open position. If the relay is activated, the terminal NO is connected to terminal C.

The buttons K11 up to K16 are not required for manual operation of the switches, but for defining a path configuration.

K12 Any button K11 up to K16 in grey color indicates that this relay is not selected. A non selected relay is not considered when defining a path configuration.

K11 To take over particular relays into the path configuration, the relay buttons must be selected by clicking on each of the relay buttons required. The selected relay is displayed with a button in green color. All relays whose relay buttons are selected are taken over into a path configuration.

Pressing the Shift key while clicking on a relay button will toggle between selecting all relays of this module and deselecting all of them.

Relay configuration

OSP-B101 dialog

When the dialog for operation of the R&S OSP-B101 module is opened, the actual relay setting of this module is read back from the hardware and displayed.

The dialog as described above applies to further options of the R&S OSP as far as the option has got a similar relay configuration. It will apply to the following modules:

Option	Relay configuration
OSP-B106	3 x SPDT relay with N connectors, 12 GHz, 3 x SPDT relays with BNC connectors, 900 MHz / 2 A
OSP-B107	6 x SPDT relay, solid state, 6 GHz
OSP-B111	6 x SPDT relay, 40 GHz
OSP-B111UL	3 or 6 x SPDT relay, 50 GHz
OSP-B111VL	3 or 6 x SPDT relay, 67 GHz
OSP-B127	6 x SPDT relay, solid state, terminated, 10 GHz
OSP-B132	6 x SPDT relay with N connectors, 12 GHz

Relay numbering

Please note that for the module OSP-B106 the relays are numbered from K1 to K6 but from K11 to K16 for all other modules.

3.3.7 Controlling the R&S OSP-B102/-B112/-B122/-B126/-B128

After selection of the R&S OSP-B102 module the following dialog is opened.

The module R&S OSP-B102 contains two RF switches of SP6T type, which is shown in the OSP-B102 dialog.

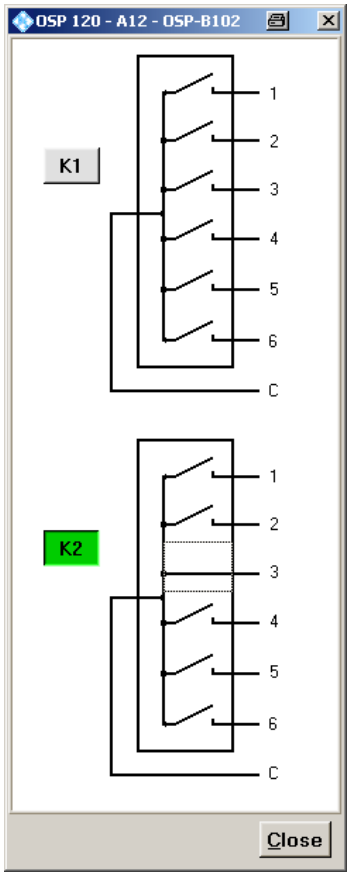

Clicking on any of the six positions of the two relays, this relay will switch to the associated terminal. Clicking on a closed position will open it and reset this relay.

SP6T switch

Note that for this type of relay only one terminal (1 of 6) can be activated at the same time. If no terminal is activated, the relay is in open position.

The buttons K1 and K2 are not required for manual operation of the switches, but for defining a path configuration (see chapter 3.4).

K1 A button K1 and/or K2 in grey color indicates that this relay is not selected. A non selected relay is not considered when defining a path configuration.

K2 To take over particular relays into the path configuration, the relay buttons must be selected by clicking on each of the relay buttons required. The selected relay is displayed with a button in green color. All relays whose relay buttons are selected are taken over into a path configuration.

► Pressing the Shift key while clicking on a relay button will toggle between selecting all relays of this module and deselecting all of them.

OSP-B102 dialog

When the dialog for operation of the R&S OSP-B102 module is opened, the actual relay setting of this module is read back from the hardware and displayed.

The dialog as described above applies to further options of the R&S OSP as far as the option has got the same relay configuration. It will apply to the following modules:

Option	Relay configuration
OSP-B112	2 x SP6T relay, 40 GHz
OSP-B112UL	1 x SP6T relay, 50 GHz, latched
OSP-B122H	1x SP6T relay, terminated, 40 GHz
OSP-B128	Up to 3 x SP6T relay, solid state, terminated, 10 GHz
OSP-B133	1x SP6T relay, N-connectors, 12.4 GHz

3.3.8 Controlling the R&S OSP-B125

The modules R&S OSP-B125, R&S OSP-B125 and R&S OSP-B125H contain three RF switches of SP6T type and six RF switches of SPDT type. After selecting the module, a dialog is opened as shown below:

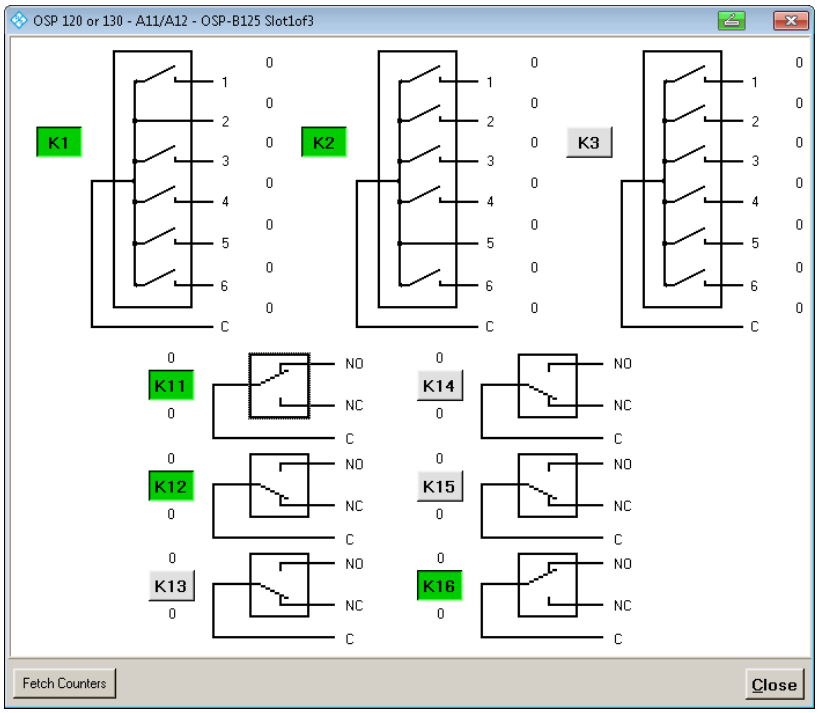

Clicking on any of the six positions of the three SP6T relays, this relay will switch to the associated terminal. Clicking on a closed position will open it and reset this relay.

SP6T switch

Note that for each SP6T relay, only one terminal (1 of 6) can be activated at the same time. If no terminal is activated, the relay is in open position.

Clicking on the symbol of any of the six SPDT relays, the position of each relay can be toggled individually.

SPDT switch

Note that the terminal NC assigns the Normally Closed position. When a SPDT relay is not activated, terminal NC is connected to terminal C.
The terminal NO is the Normally Open position. If the relay is activated, the terminal NO is connected to terminal C.

The buttons K1 up to K3 and K11 up to K16 are not required for manual operation of the switches, but for defining a path configuration.

K12

Any K button in grey color indicates that this relay is not selected. A non selected relay is not considered when defining a path configuration.

K11

To tak e over particular relays into the path configuration, the relay buttons must be selected by clicking on each of the relay buttons required. The selected relay is displayed with a button in green color. All relays whose relay buttons are selected are taken over into a path configuration.

Pressing the Shift key while clicking on a relay button will toggle between selecting all relays of this module and deselecting all of them.

Relay configuration

OSP-B125 dialog

When the dialog for operation of the R&S OSP-B125 module is opened, the actual relay setting of this module is read back from the hardware and displayed.

The dialog as described above applies to the following R&S OSP modules that have a similar relay configuration:

Option	Relay configuration
OSP-B125	6 x SPDT relays and 3 x SP6T relays, 18 GHz
OSP-B125E	6 x SPDT relays and 3 x SP6T relays, 26 GHz
OSP-B125H	6 x SPDT relays and 3 x SP6T relays, 40 GHz

Relay numbering

Please note that the SP6T relays are numbered from K1 to K3, while the SPDT relays are numbered from K11 to K16.

3.3.9 Controlling the R&S OSP-B103/-B158

After selection of the R&S OSP-B103 or the R&S OSP-B158 module the following dialog is opened.

The module R&S OSP-B103 contains two parallel ports, one with 16 output lines and one with 16 input lines. The OSP-B103 dialog shows both ports:

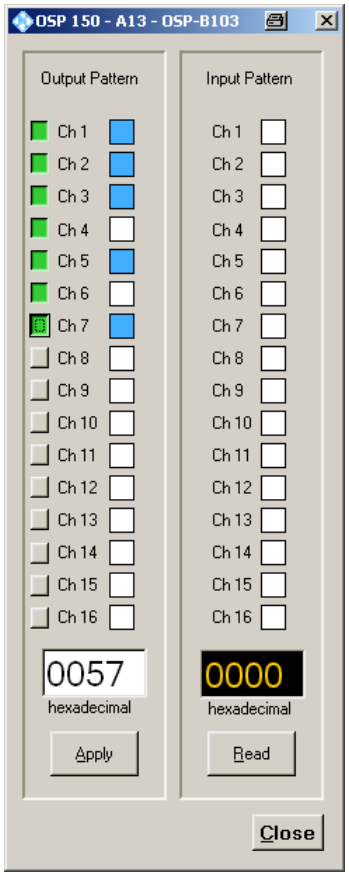

3.3.9.1 Setting the Output Pattern

Clicking on one of the channel buttons in the output pattern field, the status of the output channel can be changed.

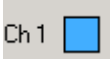

1. An output channel marked in blue color indicates that the output channel is switched to low level (GND). Switching is performed on an active low signal, therefore the blue color indicates the active state.

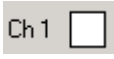

2. An output channel marked in white color indicates, that the output channel is in high impedance state. This is also the default after reset.

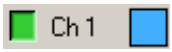

3. To take over particular channels of the output port into the path configuration, the button left to the channels of the output pattern must be selected by clicking on each button of the required outputs. The selected output channel is displayed in green color. All output ports with selected (green) buttons are taken over into a path configuration.
4. Pressing the Shift key while clicking on a relay button will toggle between selecting all relays of this module and deselecting all of them.

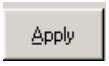

5. Pressing this button sets the OPS-B103 outputs to the defined output pattern.
6. The actual setting of the R&S OSP-B103 outputs now is displayed in the output pattern field (Ch1 to Ch16).

7. The hexadecimal representation of the output pattern is displayed in the OSP-B103 dialog, too. Ch1 corresponds to the lowest bit, having the value 1, whereas Ch16 is the highest bit, having the value 8000.

OSP-B103 dialog

When the dialog for operation of the R&S OSP-B103 module is opened, the actual output pattern setting of this module is read back from the hardware and displayed.

I/O ports

Note that for I/O ports the hardware specification must be observed when connecting external equipment. See chapter 8.4 for further information.

3.3.9.2 Reading the Input Pattern

The input pattern of the R&S OSP-B103 can be read by one click.

1. Pressing this button reads the input pattern of the OPS-B103
   The status of each input now is displayed in the input pattern field (Ch1 to Ch16).
   The hexadecimal representation of the input pattern is displayed in the OSP-B103 dialog, too. Ch1 corresponds to the lowest bit, having the value 1, whereas Ch16 is the highest bit, having the value 8000.

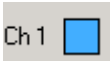

2. An input channel marked in blue color indicates that the input channel reads high level.

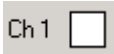

3. An input channel marked in white color indicates that the input channel reads low level.

OSP-B103 dialog

When the dialog for operation of the R&S OSP-B103 module is opened, the actual input pattern of this module is read back from the hardware and displayed.

The module R&S OSP-B158 is similar to the R&S OSP-B103 module. For controlling this module, see chapter 3.3.9.

The R&S OSP-B158 module contains a checkbox *Display AU600 panel design*. After selecting the checkbox, the user is prompted to close the actual panel and to open it again. After opening the OSP-B158 panel again, a special interface for controlling the AU600 antenna system appears.

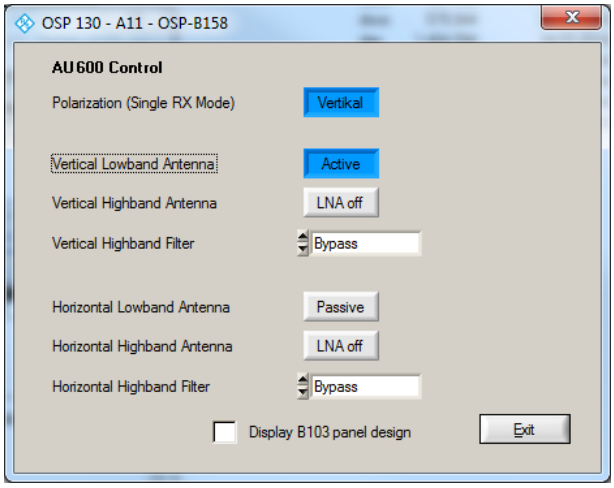

Figure 3-4: AU600 panel design

AU600 panel design

The special AU600 panel design is explained in detail in the R&S AU600 manual.

3.3.10 Controlling the R&S OSP-B104/-B114

After selection of the R&S OSP-B104 module the following dialog is opened.

The module R&S OSP-B104 contains control for up to four external power relays. Furthermore, five output lines and four input lines of I/O ports are available, and there is some specific interlock functionality. The OSP-B104 dialog shows all these elements:

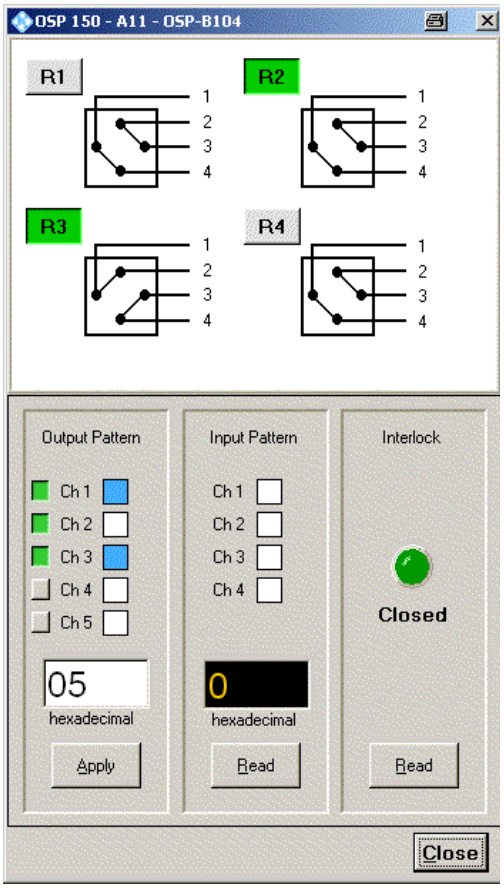

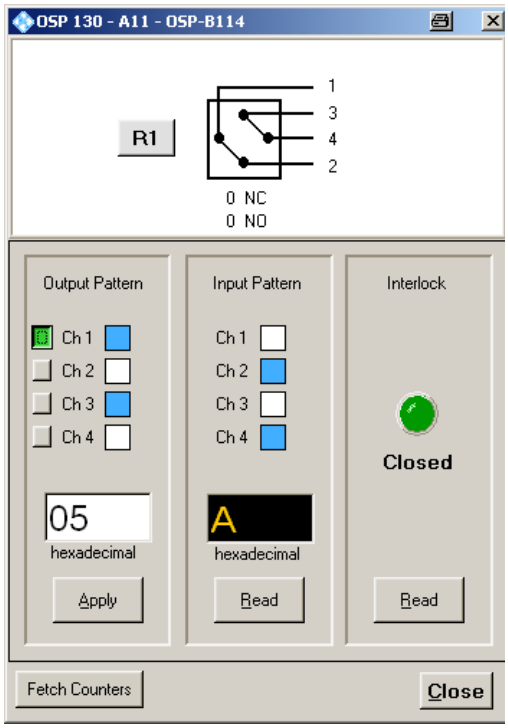

See also chapter 9.2.4 for a detailed description of the interface.

The module R&S OSP-B114 only contains one built-in DPDT relay and offers four output lines. The other functions are the same as for the OSP-B104 module.

3.3.10.1 Setting the Transfer Relays

Clicking to the symbol of the relay, the position of each relay can be toggled individually. In one position the connections are made between connectors 1 and 2 and between 3 and 4. In the other position the connections are made between connectors 1 and 4 and between 2 and 3.

The buttons R1 up to R4 are not required for manual operation of the switches, but for defining a path configuration (see chapter 3.4).

R1 Any button R1 up to R4 in grey color indicates that this relay is not selected. A non selected relay is not considered when defining a path configuration.

R2 To take over particular relays into the path configuration, the relay buttons must be selected by clicking on each of the relay buttons required. The selected relay is displayed with a button in green color. All relays whose relay buttons are selected are taken over into a path configuration.
Pressing the Shift key while clicking on a relay button will toggle between selecting all relays of this module and deselecting all of them.

OSP-B104/-B114 dialog

When the dialog for operation of the R&S OSP-B104 module is opened, the actual relay setting of this module is read back from the hardware and displayed. The information from the relay status is used, therefore also manual operation of the relay is recognized.

As mentioned above, the actual status of the relays is read back from the relays itself via an additional contact (position contact). If this contact is not wired or does not close, the “faulty” status of a relay is marked by a red field at the relay number concerned. See following example.

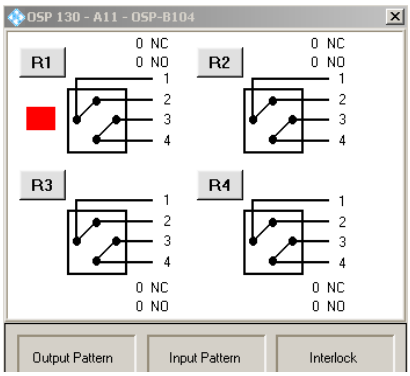

OSP-B104 relay status / delay time

The LAN configuration can be setup using the OSP Panel application. Seeback of the relay status on the OSP-B104 fails and is marked by a red field, the relay position contact and/or cabling needs to be checked.
Note that the OSP-B104 relay delay time must be set in accordance to the relay data specification. If the delay time is too short, the relay status also may be shown as faulty. See chapter 5.2.4 for further information on the relay delay time.

3.3.10.2 Setting the Output Pattern

Clicking on one of the channel buttons in the output pattern field, the status of the output channel can be changed.

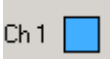

An output channel marked in blue color indicates that the output channel is switched to low level (GND). Switching is performed on an active low signal, therefore the blue color indicates the active state.

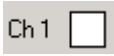

An output channel marked in white color indicates, that the output channel is in high impedance state. This is also the default after reset.

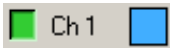

To take over particular channels of the output port into the path configuration, the button left to the channels of the output pattern must be selected by clicking on each button of the required outputs. The selected output channel is displayed in green color. All output ports with selected (green) buttons are taken over into a path configuration. Pressing the Shift key while clicking on a relay button will toggle between selecting all relays of this module and deselecting all of them.

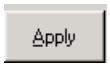

Pressing this button sets the OPS-B104 outputs to the defined output pattern.
The actual setting of the R&S OSP-B104 outputs now is displayed in the output pattern field (Ch1 to Ch5).
The hexadecimal representation of the output pattern is displayed in the OSP-B105 dialog, too. Ch1 corresponds to the lowest bit, having the value 1, whereas Ch5 is the highest bit, having the value 10.

OSP-B104/-B114 dialog
When the dialog for operation of the R&S OSP-B104 module is opened, the actual output pattern setting of this module is read back from the hardware and displayed.

I/O ports
Note that for I/O ports the hardware specification must be observed when connecting external equipment. See chapter 8.4 for further information

3.3.10.3 Reading the Input Pattern

The input pattern of the R&S OSP-B104/-B114 can be read by one click.

1. Pressing this button reads the input pattern of the OPS-B104
   The status of each input now is displayed in the input pattern field (Ch1 to Ch4).
   The hexadecimal representation of the input pattern is displayed in the OSP-B104 dialog, too. Ch1 corresponds to the lowest bit, having the value 1, whereas Ch4 is the highest bit, having the value 8.

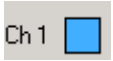

2. An input channel marked in blue color indicates that the input channel reads high level.

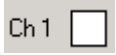

3. An input channel marked in white color indicates that the input channel reads low level.

OSP-B104/-B114 dialog

When the dialog for operation of the R&S OSP-B104 module is opened, the actual input pattern of this module is read back from the hardware and displayed.

3.3.10.4 Reading the Interlock State

The interlock state of the R&S OSP-B104 can be read by one click.

Pressing this button reads the interlock state of the OPS-B104
The status of the interlock, i.e. if there is a connection between pins 7 and 15 of the IN / OUT connector, is indicated. A green signal shows a closed interlock, a red signal an open interlock. If the interlock is closed, a relay also closes a contact between pins 8 and 14 of the IN / OUT connector.

OSP-B104/-B114 dialog

When the dialog for operation of the R&S OSP-B104 module is opened, the actual interlock status is read back from the hardware and displayed.

3.3.11 Controlling the R&S OSP-B108

After selection of the R&S OSP-B108 module the following dialog is opened.

The module R&S OSP-B108 contains one switches of 4P6T type, which is shown in the OSP-B108 dialog.

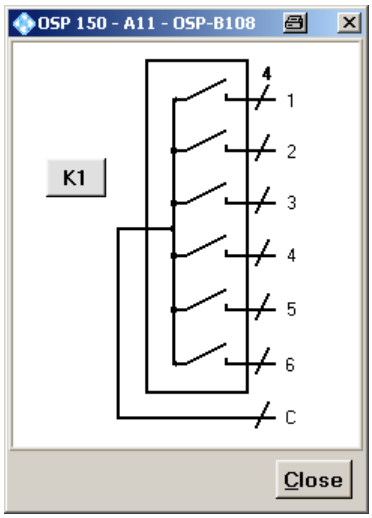

Clicking on any of the six positions this relay will switch to the associated terminal. Clicking on a closed position will open it and reset this relay.

4P6T switch

Note that for this type of relay only one terminal (1 of 6) can be activated at the same time. If no terminal is activated, the relay is in open position.

The buttons K1 is not required for manual operation of the switches, but for defining a path configuration (see chapter 3.4).

K1 A button K1 and/or K2 in grey color indicates that this relay is not selected. A non selected relay is not considered when defining a path configuration.

K1 To take over particular relays into the path configuration, the relay buttons must be selected by clicking on each of the relay buttons required. The selected relay is displayed with a button in green color. All relays whose relay buttons are selected are taken over into a path configuration.
Pressing the Shift key while clicking on a relay button will toggle between selecting all relays of this module and deselecting all of them.

OSP-B108 dialog

When the dialog for operation of the R&S OSP-B108 module is opened, the actual relay setting of this module is read back from the hardware and displayed.

3.3.12 Controlling the R&S OSP-B131

After selection of the R&S OSP-B131 module the following dialog is opened.

The module R&S OSP-B131 contains two SPDT relays.

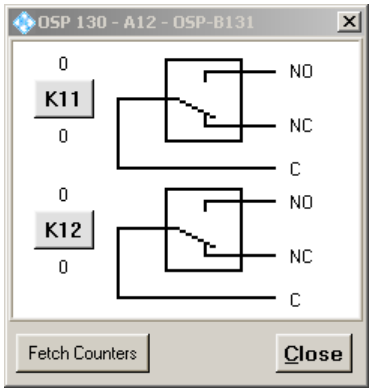

Clicking to the symbol of the relay, the position of each relay can be toggled individually.

SPDT switch

Note that the terminal NC assigns the Normally Closed position. When the relay is not activated, terminal NC is connected to terminal C.
The terminal NO is the Normally Open position. If the relay is activated, the terminal NO is connected to terminal C.

The buttons K11 and K12 are not required for manual operation of the switches, but for defining a path configuration (see chapter 3.4).

K12 Any button K11 and/or K12 in grey color indicates that this relay is not selected. A non selected relay is not considered when defining a path configuration.

K11 To take over particular relays into the path configuration, the relay buttons must be selected by clicking on each of the relay buttons required. The selected relay is displayed with a button in green color. All relays whose relay buttons are selected are taken over into a path configuration.
Pressing the Shift key while clicking on a relay button will toggle between selecting all relays of this module and deselecting all of them.

OSP-B131 dialog

When the dialog for operation of the R&S OSP-B131 module is opened, the actual relay setting of this module is read back from the hardware and displayed.

3.3.13 Controlling the R&S OSP-B116/-B136

After selection of the R&S OSP-B116/-B116H and OSP-B136 module, respectively, one of the following dialogs is opened.

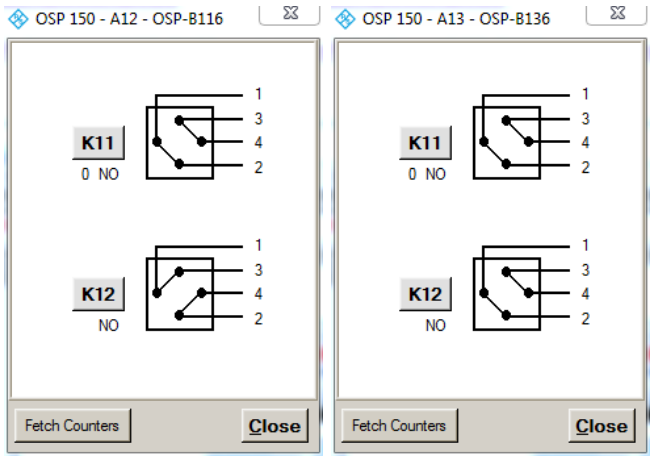

The modules R&S OSP-B116/-B116H and OSP-B136 contain two DPDT relays.

Note that the module OSP-B116H works up to 40 GHz.

Clicking to the symbol of the relay, the position of each relay can be toggled individually.

DPDT switch

When the relay is not activated, terminals 1 - 2 and 3 - 4 are connected. This is the reset (power on) condition as well. If the relay is activated, the terminal 1 - 3 and 2 - 4 are connected.

The buttons K11 and K12 are not required for manual operation of the switches, but for defining a path configuration (see chapter 3.4).

K12 Any button K11 and/or K12 in grey color indicates that this relay is not selected. A non selected relay is not considered when defining a path configuration.

K11 To take over particular relays into the path configuration, the relay buttons must be selected by clicking on each of the relay buttons required. The selected relay is displayed with a button in green color. All relays whose relay buttons are selected are taken over into a path configuration.
Pressing the Shift key while clicking on a relay button will toggle between selecting all relays of this module and deselecting all of them.

3.3.14 Controlling the R&S OSP-B142

After selection of the R&S OSP-B142 module the following dialog is opened.

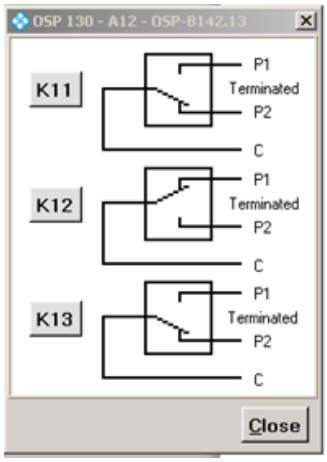

The module R&S OSP-B142 contains a maximum of three SPDT relays.

Clicking to the symbol of the relay, the position of each relay can be toggled individually.

SPDT switch

When the relay is not activated, port C is connected to port P2. This is the reset (power on) condition as well. When the relay is activated, port C is connected to port P1.

The buttons K11, K12 and K13 are not required for manual operation of the switches, but for defining a path configuration (see chapter 3.4).

K12 Any button K11, K12 or K13 in grey color indicates that this relay is not selected. A non-selected relay is not considered when defining a path configuration.

K11 To take over particular relays into the path configuration, the relay buttons must be selected by clicking on each of the required relay buttons. The selected relay is displayed with a button in green color. All relays whose relay buttons are selected are taken over into a path configuration.
Pressing the Shift key while clicking on a relay button will toggle between selecting all relays of this module and deselecting all of them.

3.3.15 Controlling the R&S OSP-B149H

After selection of the R&S OSP-B149H module the following dialog is opened.

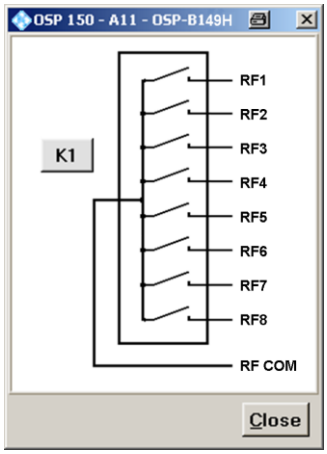

The module R&S OSP-B149H contains a terminated solid-state SP8T relay.

Clicking to the symbol of the relay, the position of each relay can be toggled individually.

SP8T switch

When the relay is not activated, port C is connected to no port. This is the reset (power on) condition as well. When the relay is activated, port C is connected to the port that is coded in the control signal.

The button K1 is not required for manual operation of the switches, but for defining a path configuration (see chapter 3.4).

K1 The button K1 in grey color indicates that this relay is not selected. A non-selected relay is not considered when defining a path configuration.

K1 To take over a relay into the path configuration, the relay button must be selected by clicking on it. The selected relay is displayed with a button in green color. All relays whose relay buttons are selected are taken over into a path configuration.

3.4 Path Configuration

A very comfortable way to define the different switching paths required in a test setup or in a system is the R&S OSP feature “path configuration”. This utility allows to combine several relay positions of different R&S OSP modules in one path information. The path can be named with a suitable name. If path switching is required, only the path configuration is called by its name and the switching is performed more or less by a single command.
The advantage to make use of the OSP path configuration utility is:

The switching is called by logical name from the external application (for example EMC32 software). Using the logical name, the external application does not need to know the R&S OSP hardware configuration.

If the hardware configuration changes, it is sufficient to adapt the path configuration inside the R&S OSP. The external application does not need to be changed.

Choosing a default selection

To obtain the correct switching for a new path configuration, it is recommended to start with a well-defined default selection. There are two possibilities:
If the number of switches to be included in a path is rather small, it is recommended to deselect all switches. This is done by >Configure >Deselect all Switches.
If the number of switches is rather large, use >Configure >Select all Switches instead.
Don't forget to select / deselect all switches which are not correctly selected by this default selection.

3.4.1 Save a Path

The path configuration is supported by the OSP Panel application. Refer to chapters 3.2 and 3.3 for the installation and operation of the OSP Panel.

To have a defined condition for the path switching, it is recommended to start with the R&S OSP in Reset condition.

A path configuration may consist out of several relays located on different R&S OSP modules. Please note that the relay buttons in the corresponding dialogs must be selected for all relays which should be taken over in the path configuration.

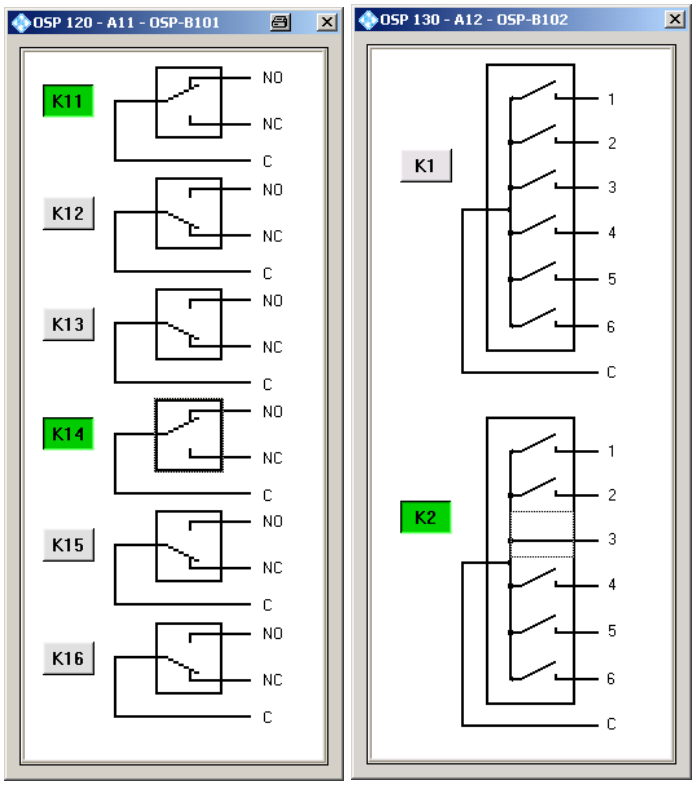

In the above example, the relays K11 and K14 from module R&S OSP-B101 and the relay K2 from module R&S OSP-B102 will be saved as a path.

To define and save the path, proceed as follows:

1. Select >Path >Save Path … in the OSP Panel.
   The following dialog will appear:

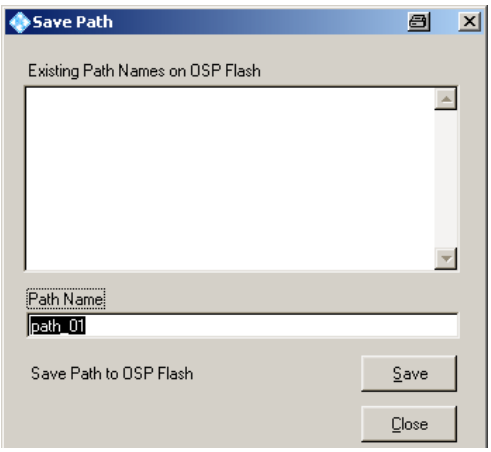

The path configuration is named by default to “path_01”. A new name for the path configuration can be entered by overwriting the default name.

Path Name

The path name is limited to a maximum of 49 characters. OSP Panel does not allow to enter a longer name.

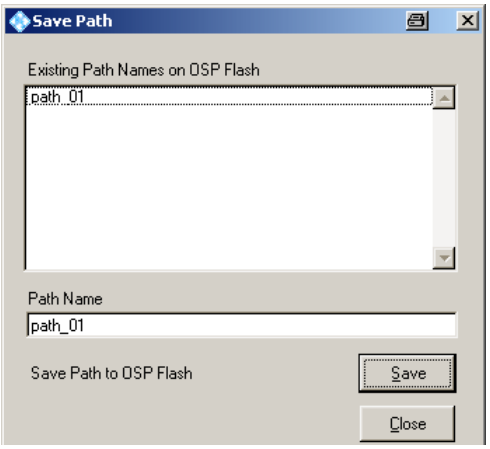

2. Pressing the button Save saves the path in the flash memory of the R&S OSP. The upper data field shows the existing paths which already are stored in the R&S OSP flash memory.

3. Takes over the actual switching into the path and stores the path in the R&S OSP.

Invalid path configurations

When changing the hardware configuration of an OSP it may happen that a previously stored path no longer is applicable. For example, moving a module to a neighboring position and leaving the previous position empty will make all references to this slot

invalid.
Whenever the OSP Panel encounters such an invalid path, it will display some warning message, and in addition the path name will be displayed in blue, giving some bare information about the included switches.

Number of Paths

At least 60 paths can be stored on an R&S OSP.

3.4.2 Switch a Path

If a path has been defined as described in the previous chapter, the path can be switched as follows:

1. Start the OSP Panel.
2. Select >Path >Switch Path … in the OSP Panel.

The following dialog appears:

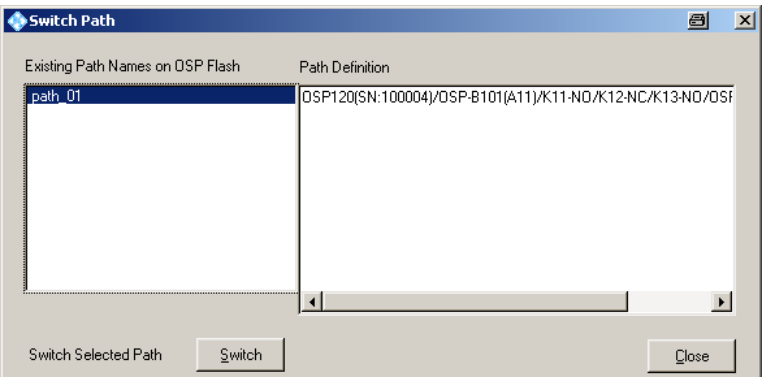

The left field shows the names of all path configurations which already have been defined. The highlighted path configuration will be switched when pressing the Switch button.

The right field Path Definition shows all relays and settings related to the selected path.

The selected path configuration will be switched; i.e. all the relays and outputs, respectively, which are part of the path, will be set to the defined position.

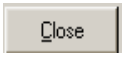

Pressing this button will exit the dialog

3.4.3 Delete a Path

If a path has been defined as described in the previous chapter, the path can be deleted as follows:

1. Start the OSP Panel.
2. Select >Path >Delete Path … in the OSP Panel.

The following dialog appears:

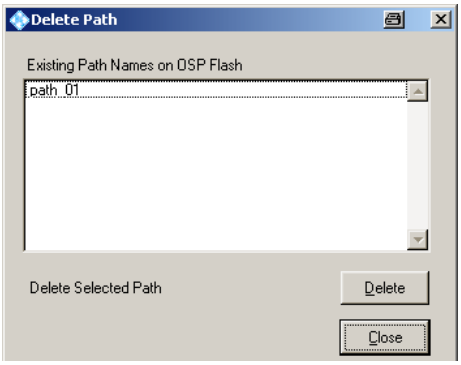

The field shows the names of all paths which already have been defined. The highlighted path configuration will be deleted when pressing the Delete button.

The selected path will be deleted from the flash memory in the R&S OSP.
The only possibility to recover a path which was unintentionally deleted is to use the Import Path function, assuming the path has been exported before.

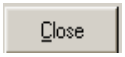

Pressing this button will exit the dialog

3.4.4 Export a Path

If a path has been defined as described in the previous chapter, the path can be exported to a file as follows:

1. Start the OSP Panel.
2. Select >Path >Export Paths … in the OSP Panel.

The following dialog appears:

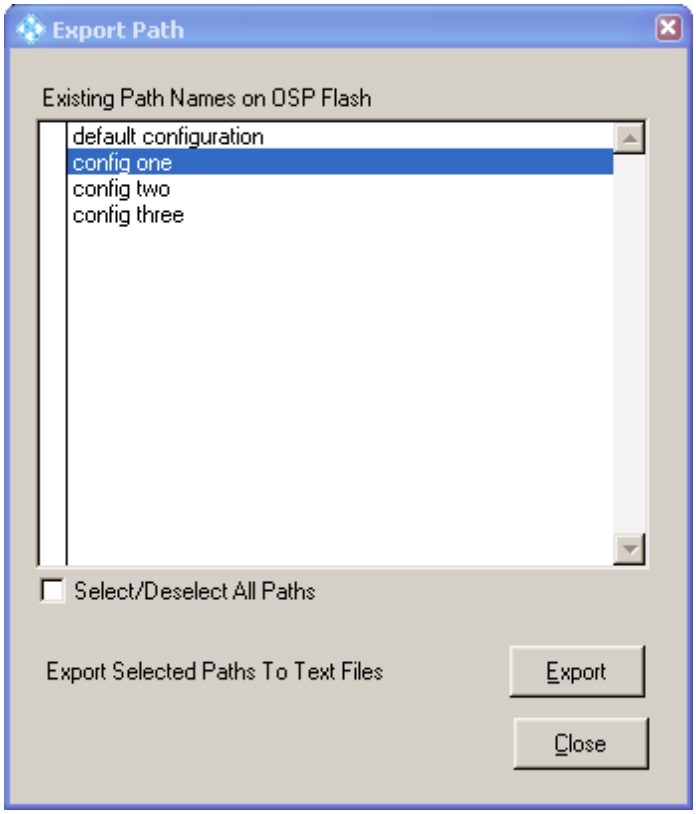

The list of path names contains all paths stored on the flash memory of the OSP. A tick in the leftmost column indicates which paths are currently selected in this dialog. Clicking into a line toggles selection and deselection of the path. By activating the check box below the list all paths can be selected or deselected at once.

End of path selection, go to the following dialog.

Pressing this button will exit the dialog.

In the next dialog the directory is chosen where the files containing the path information are created.

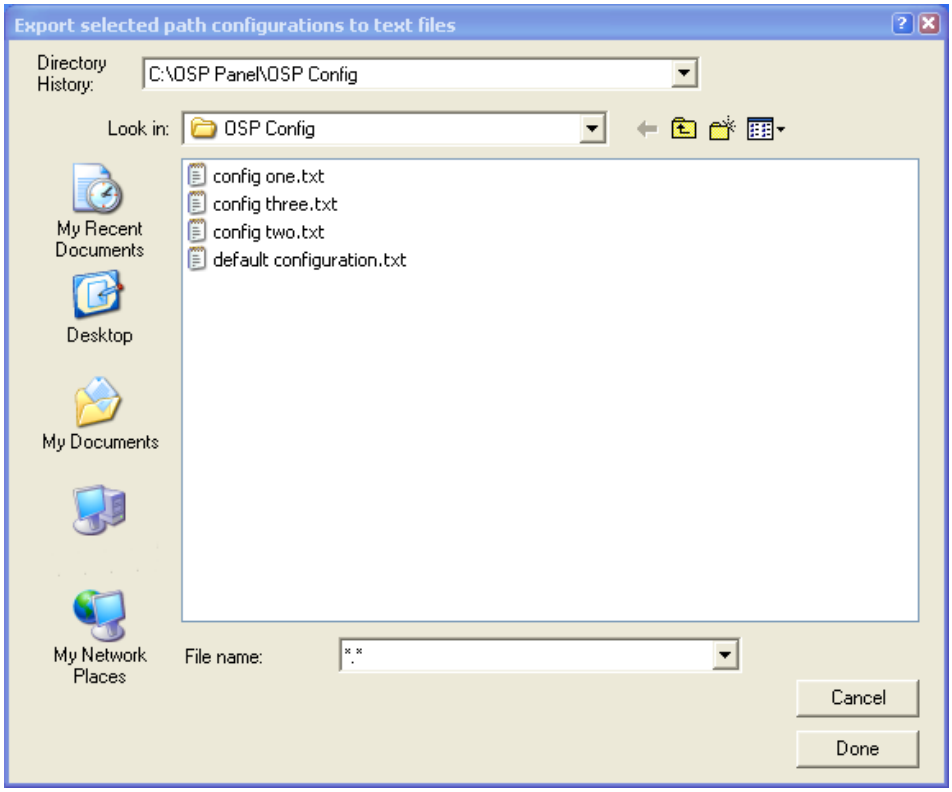

With the usual Windows operation one can move throughout the files system in order to define the directory. By default the directory is the installation path of the OSP Panel.

The file name selection in the lower part of the dialog has no meaning. Only the directory name in the field at the top of the dialog is used.

Done — The selected paths will be saved as files with the suffix ".txt" to the directory indicated.

Cancel — Pressing this button will exit the dialog

3.4.5 Import a Path

If a path has been exported as described in the previous chapter, the path can be imported again. It is required that the OSP Panel is connected to an instrument.

1. Start the OSP Panel.
2. Select >Path >Import Paths … in the OSP Panel.

The following dialog appears:

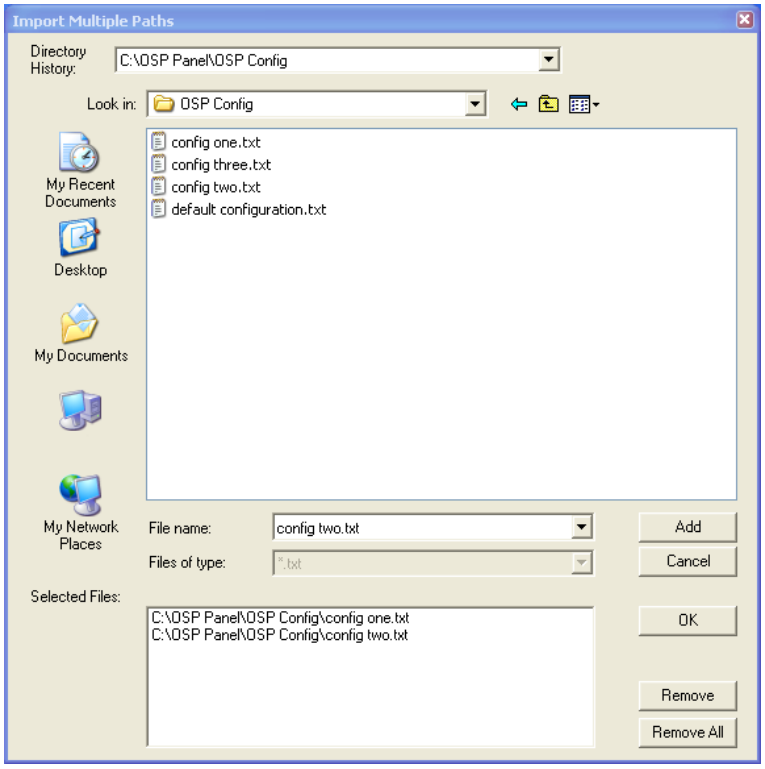

This dialog allows to select all files which shall be imported and saved on the OSP. Once all required files are collected, pressing the OK button will start the import.

Add — Pressing the Add button moves the marked file to the list of selected files. With the standard Windows function a group of files can be selected at once: using the Shift key while clicking on a second file will mark all files between a first file and this one, and using the Ctrl key at the same time will add the second file as a marked one.

Cancel — Will exit the dialog

OK — The selected files will be imported and stored as paths to the R&S OSP flash memory.

Remove — The marked file will be removed from the list of selected files.

Remove All — All files will be removed from the list of selected files.

3.5 Sample Session

The sample session shows a typical application of the R&S OSP and gives a guidance to the user how to solve the various switching tasks with the R&S OSP.

3.5.1 Example Path Configuration

The following example shows how to set up the path for a Microwave EMS system up to 18 GHz consisting of a signal generator, three amplifiers and a two-channel power

meter. The following signal paths are required and have to be set dependent on the frequency range.

- Generator output to amplifier input
- Amplifier output forward power to power meter
- Amplifier output reverse power to power meter

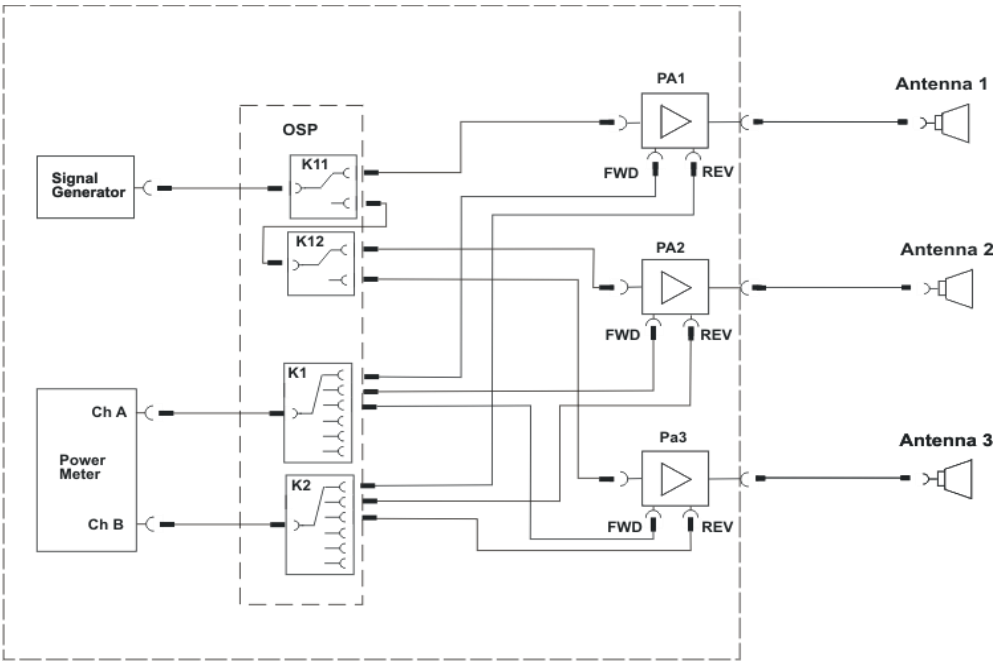

3.5.1.1 Defining the Path for PA1

To have a defined condition for the path switching, it is recommended to start with the R&S OSP in Reset condition.

Reset

To obtain the correct switching for a new path configuration, it is recommended to reset the R&S OSP. Select in the OSP Panel >Configure >Deselect all Switches.

According to the above example, for amplifier PA1 the following paths are required:

Signal path	Required relay position
Sig Gen to PA1 input	R&S OSP-B101 / K11- NO
PA1 Fwd to Power Meter Ch A	R&S OSP-B102 / K1-1
PA1 Fwd to Power Meter Ch B	R&S OSP-B102 / K2-1

Start the OSP Panel and make sure not to take over any undesired relay setting. Select therefore in the OSP Panel >Configure >Deselect all Switches.

After that, select the OSP-B101 dialog and set K11 to position NO. Do not forget to select the K11 button.

Now select the OSP-B102 dialog and set K1 and K2 to position 1. Do not forget to select the K1 and K2 buttons.

Now start the path configuration as follows:

► Select >Path >Save Path … in the OSP Panel.

The following dialog will appear:

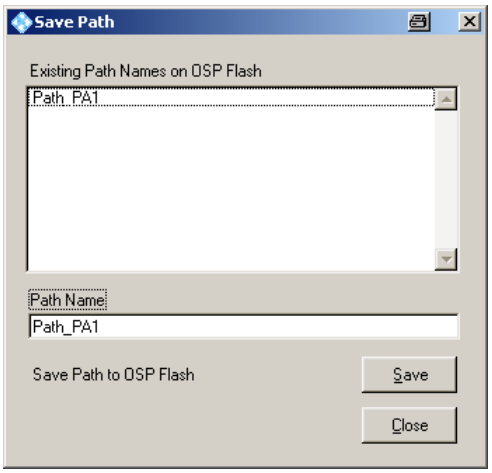

The upper data field shows the paths which are already stored in the R&S OSP. Type in the path name “Path_PA1” and press the button “Save”.

3.5.1.2 Defining the Path for PA2

According to the above example, for amplifier PA2 the following paths are required:

Signal path	Required relay position
Sig Gen to PA2 input	R&S OSP-B101 / K11- NC, K12-NO
PA2 Fwd to Power Meter Ch A	R&S OSP-B102 / K1-2
PA2 Fwd to Power Meter Ch B	R&S OSP-B102 / K2-2

Start the OSP Panel and make sure not to take over any undesired relay setting. Select therefore in the OSP Panel >Configure >Deselect all Switches.

After that, select the OSP-B101 dialog and set K11 to position NC and K12 to position NO. Do not forget to select the K11 and K12 buttons.

Now select the OSP-B102 dialog and set K1 and K2 to position 2. Do not forget to select the K1 and K2 buttons.

Now start the path configuration as follows:

Select >Path >Save Path … in the OSP Panel.

The following dialog will appear:

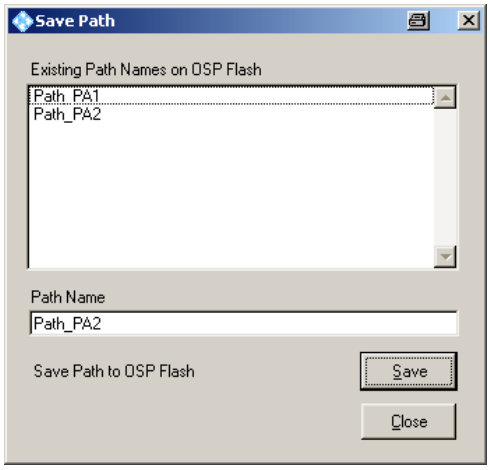

The upper data field shows the paths which are already stored in the R&S OSP. Type in the path name “Path_PA2” and press the button “Save”.

3.5.1.3 Defining the path for PA3

According to the above example, for amplifier PA3 the following paths are required:

Signal path	Required relay position
Sig Gen to PA3 input	R&S OSP-B101 / K11- NC, K12-NC
PA3 Fwd to Power Meter Ch A	R&S OSP-B102 / K1-3
PA3 Fwd to Power Meter Ch B	R&S OSP-B102 / K2-3

Start the OSP Panel and make sure not to take over any undesired relay setting. Select therefore in the OSP Panel >Configure >Deselect all Switches.

After that, select the OSP-B101 dialog and set K11 to position NC and K12 to position NC. Do not forget to select the K11 and K12 buttons.

Now select the OSP-B102 dialog and set K1 and K2 to position 3. Do not forget to select the K1 and K2 buttons.

Now start the path configuration as follows:

Select >Path >Save Path … in the OSP Panel.

The following dialog will appear:

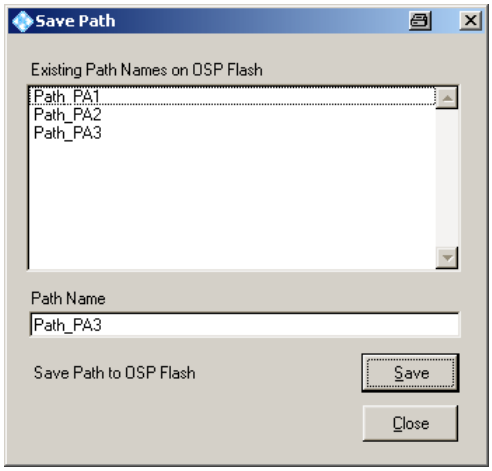

The upper data field shows the paths which are already stored in the R&S OSP. Type in the path name “Path_PA3” and press the button “Save”.

The path configuration now is stored in the OSP flash memory and is available for further use.

3.5.2 Manual Setting of the Paths

To set up the path for power amplifier PA 1, PA2 and PA3, respectively, only a simple step is required.

Select >Path >Switch Path … in the OSP Panel.

The following dialog appears:

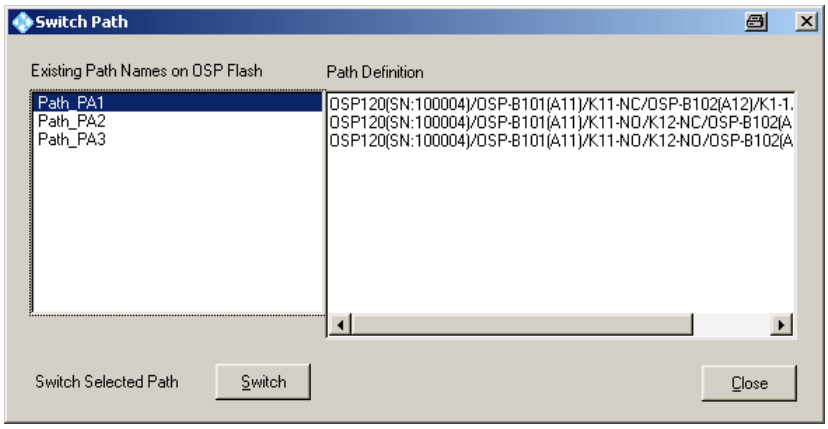

Select the path name Path_PA1, press the button “Switch” and all necessary switching for PA1 is done.

For PA2 and PA3 proceed accordingly.

The field Path Definition shows the relay setting of the selected path.

The path definition also is shown in the OSP Panel system information.

Select >File >System Info … in the OSP Panel. For the above example, the following information is shown:

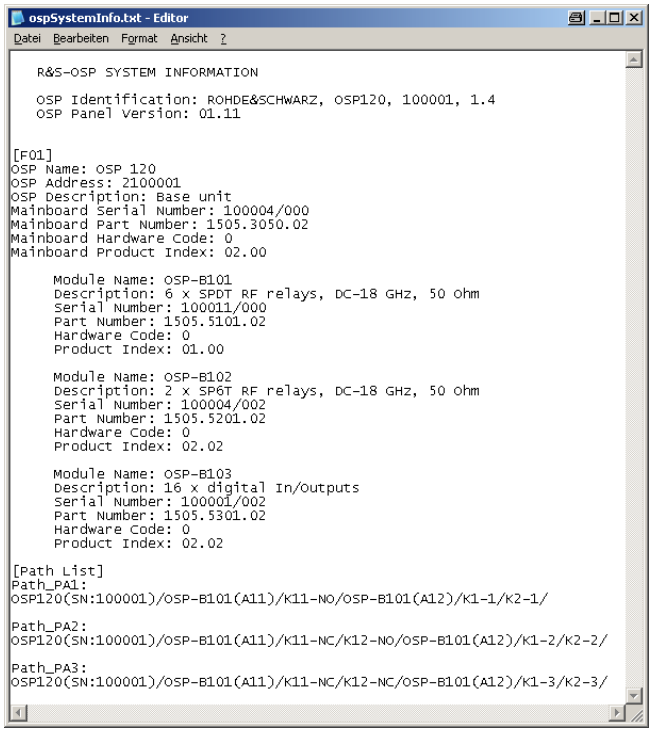

```
ospSystemInfo.txt - Editor
Datei  Bearbeiten  Format  Ansicht  ?

   R&S-OSP SYSTEM INFORMATION

   OSP Identification: ROHDE&SCHWARZ, OSP120, 100001, 1.4
   OSP Panel Version: 01.11


[F01]
OSP Name: OSP 120
OSP Address: 2100001
OSP Description: Base unit
Mainboard Serial Number: 100004/000
Mainboard Part Number: 1505.3050.02
Mainboard Hardware Code: 0
Mainboard Product Index: 02.00

     Module Name: OSP-B101
     Description: 6 x SPDT RF relays, DC-18 GHz, 50 Ohm
     Serial Number: 100011/000
     Part Number: 1505.5101.02
     Hardware Code: 0
     Product Index: 01.00

     Module Name: OSP-B102
     Description: 2 x SP6T RF relays, DC-18 GHz, 50 Ohm
     Serial Number: 100004/002
     Part Number: 1505.5201.02
     Hardware Code: 0
     Product Index: 02.02

     Module Name: OSP-B103
     Description: 16 x digital In/Outputs
     Serial Number: 100001/002
     Part Number: 1505.5301.02
     Hardware Code: 0
     Product Index: 02.02

[Path List]
Path_PA1:
OSP120(SN:100001)/OSP-B101(A11)/K11-NO/OSP-B101(A12)/K1-1/K2-1/

Path_PA2:
OSP120(SN:100001)/OSP-B101(A11)/K11-NC/K12-NO/OSP-B101(A12)/K1-2/K2-2/

Path_PA3:
OSP120(SN:100001)/OSP-B101(A11)/K11-NC/K12-NC/OSP-B101(A12)/K1-3/K2-3/
```

3.5.3 Remote Control Setting of the Path Configuration

Once the required path configurations are stored in the R&S OSP, they are available by remote control applications like the R&S EMC32 software.

The advantage to make use of the OSP path configuration utility is:

- The switching is called by logical name from the external application (for example EMC32 software). Using the logical name, the external application does not need to know the R&S OSP hardware configuration.
- If the hardware configuration has to be changed, only the path configuration inside the R&S OSP must be adapted. The external application does not need to be changed.

For the above examples, the following strings are to be sent to the R&S OSP:

ROUTe:CLOSe “Path_PA1”
ROUTe:CLOSe “Path_PA2”
ROUTe:CLOSe “Path_PA3”

Further information on remote control functions are to be found in chapters 6 and 7. Information of applications together with the R&S EMC32 software is available in chapter 8.1.

3.6 Path Configuration in virtual mode

With OSP Panel version 2.57 onwards, you can define a path configuration in virtual mode. The advantage of this method is the possibility of preparing any path configuration before the hardware is available. For details, see the Release Note for your OSP firmware version.

The following example shows the necessary steps.

3.6.1 Simulated Module Configuration

Before you can configure a path in virtual mode, you must set up the desired configuration.

Start the OSP Panel application, select --> Utility --> Virtual Mode, as shown below:

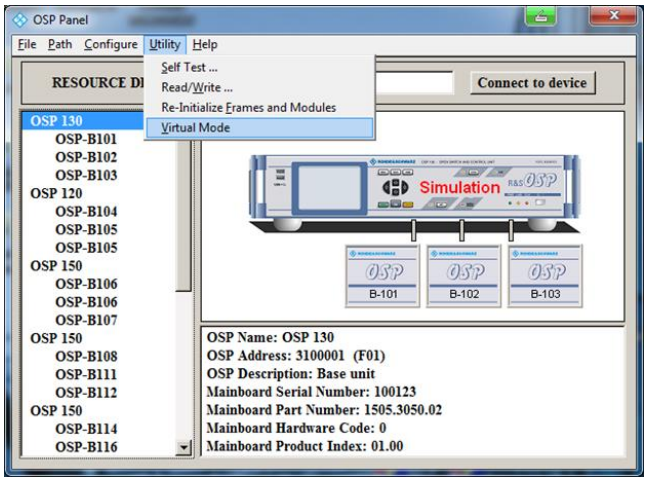

Note: Alternatively, right-click the OSP configuration structure in the left field.

OSP panel and Virtual Mode

No instrument must be connected to run OSP Panel in virtual mode (off-line).

A selection box pops up for setting up the “Simulated Module Configuration”.

Per default, OSP frame F01 is offered, which can either be model R&S OSP120 or R&S OSP130.

The following three dialogs allow to configure the OSP module slots A11 to A13. See screenshot below for a configuration of module R&S OSP-B121, R&S OSP-B122 and R&S OSP-B103.

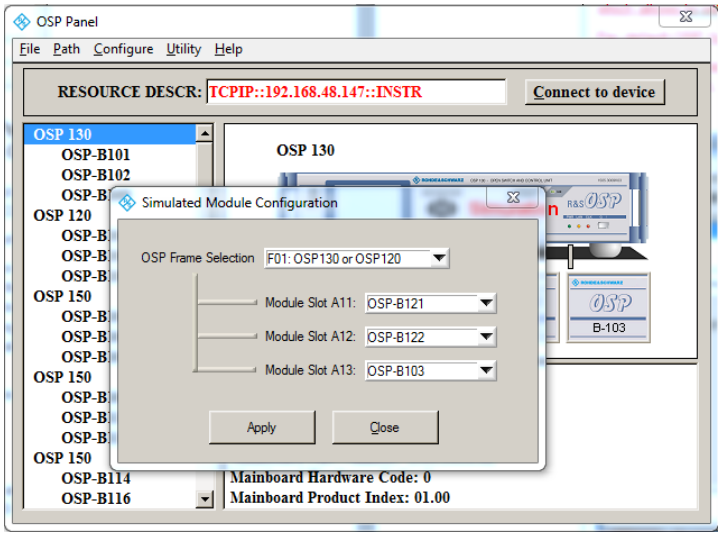

If any extension unit R&S OSP150 is used, select OSP Frame F02 and configure the module slots as requested. For any additional R&S OSP150, proceed accordingly.

After completing the configuration, press Apply and Close.

Then the OSP Panel shows the requested module configuration, only, as shown in the following example menu.

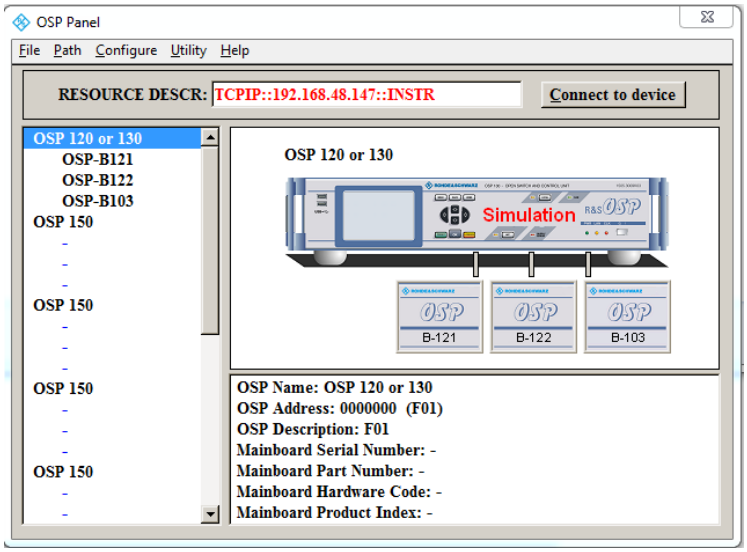

3.6.2 Path Configuration

You can now configure the path as usual (see chapter 3.4), with the exception that a path can only be exported. Exporting is shown in the example below:

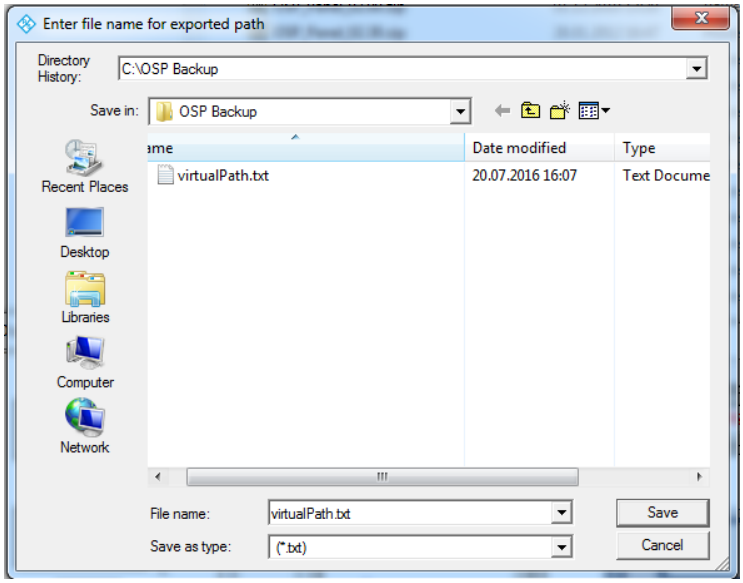

3.6.3 Import of Path Configuration

Once you have generated the path configuration in virtual mode without instruments, you can import it on an R&S OSP120 or R&S OSP130 with the same configuration as used in virtual mode.

3.7 GUI Info Line

With OSP Panel version 2.57 onwards, you can activate an info line which is shown at the R&S OSP130 built-in display, connected monitor and Web-GUI. (For details on your firmware version, see the related Release Notes.)

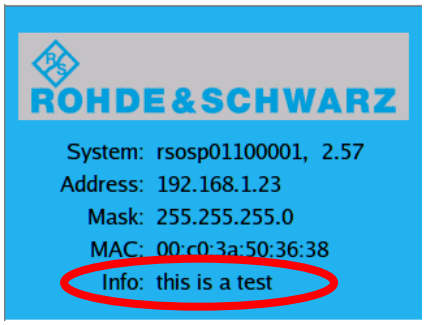

or

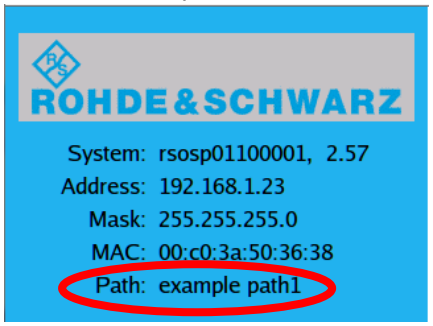

Configure the info line either via the OSP Panel application or via SCPI “SYSTem:OPTion” commands (see chapter 7.4.6). You can only configure the info line with the instrument connected, i.e. with OSP Panel in physical mode or via SCPI command.

3.7.1 Configuring the GUI Info Line

Start the OSP Panel application and connect the R&S OSP120 or R&S OSP130 to your PC. Now select Configure --> GUI Info Line, as in the example below:

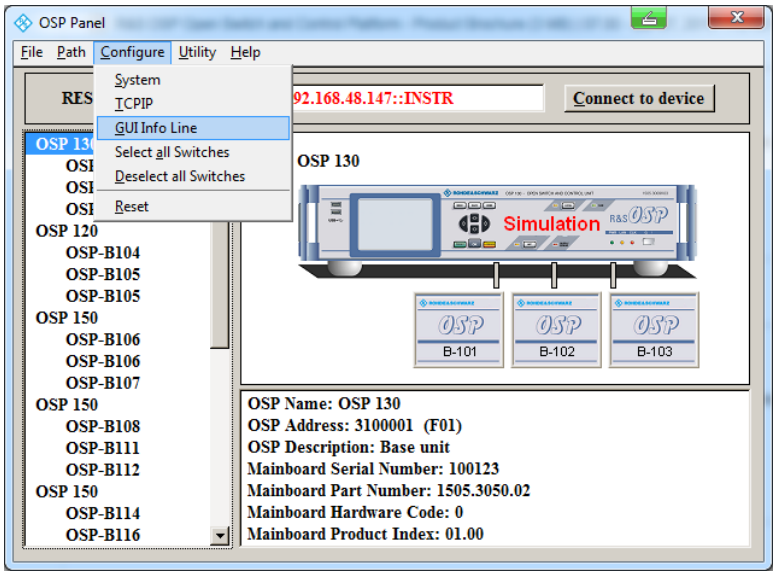

The GUI Info Line menu allows to select the following modes:

•

Info Line Mode	R&S OSP130 display
OFF	No info line is shown
Customer Text	You can define any text to be shown
Actual Path	Shows the name of the currently switched path

To enter a text line with a maximum of 49 characters, select the Info Line Mode "Customer Text". After pressing the Apply button, you are prompted to press the "STATUS" key on R&S OSP130 front panel for activating the OSP GUI Info line (see screenshot below).

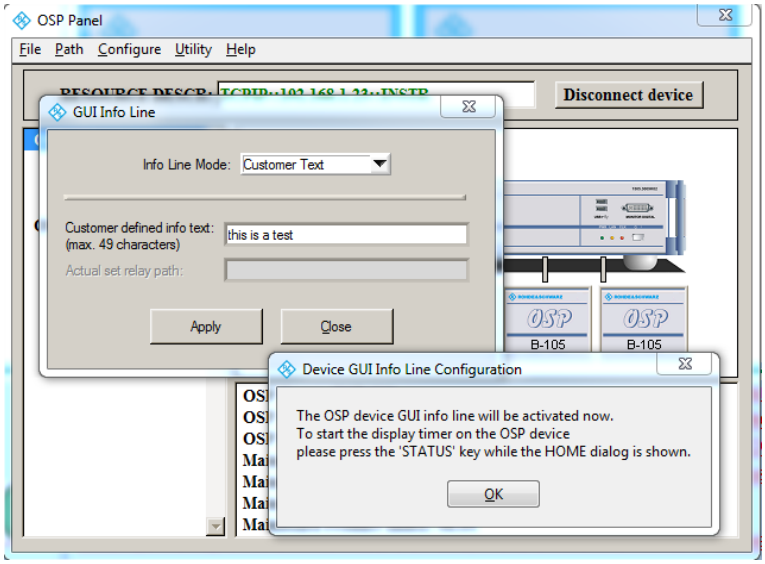

Note that after defining the text or path info, you must update the GUI display. To do so on the R&S OSP130, press the STATUS key on the front panel or switch to a different menu and back. This switching can be done manually or via a VNC mode.

The R&S OSP120 allows activation or deactivation in the same way or via a connected keyboard and monitor (or VNC).

When powering OFF/ON the R&S OSP130, the GUI info line remains active, but:

- In case of text info, the text is set to the default content.”no customer-defined info text”
- In case of path info, the display may show “no pre-defined path”, if the current path has become invalid. The same happens after any manual switching.

The following screenshots show the GUI display with the custom text info line “this is a test” or with the path info line “example path1”, respectively.

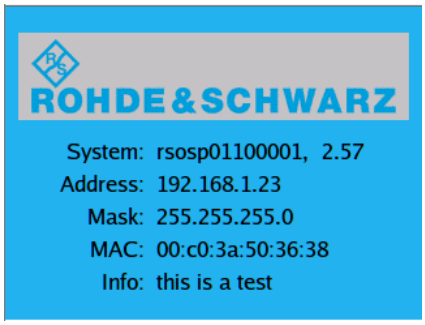

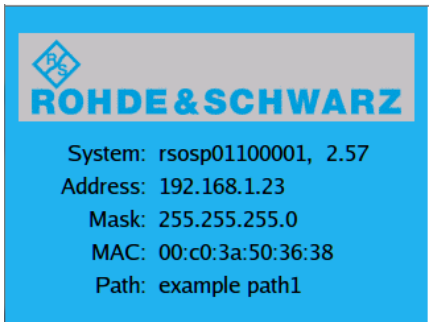

To deactivate the GUI info line, select the Info Line Mode “OFF”.

An activated GUI info line is updated every two seconds.

4 Manual Operation

The model R&S OSP120 is the version in the R&S OSP family which is operated remotely controlled. There are no keys and display on the front panel for manual operation. If an R&S OSP150 is connected to this R&S OSP120, it is also controlled from there.

The model R&S OSP130 is equipped with both display and front panel keys for manual operation.

R&S OSP model	Manual operation ...	see Chapter
R&S OSP120 without display	... with monitor and keyboard (GUI)	5.3.1
R&S OSP130 with display	... direct control via front display and panel keypad	5.3.1
R&S OSP120 and R&S OSP130	... via LAN from a separate laptop or PC (Web-GUI via VNC)	4.1 and 5.3.1

See the next chapter for manual operation modes.

4.1 Manual Operation of the Modules

“Manual operation” of the instrument functions is achieved by the OSP Panel or using the graphical user interface (GUI) of the R&S OSP via Web-Browser (all models of the R&S OSP family).

The model R&S OSP130 can be operated using the GUI together with a display and keyboard.

The application OSP Panel runs on an external computer with Windows Operating System. The external computer is connected to the R&S OSP via LAN network.

See chapters 3.2 and 3.3 for installation and operation of the OSP Panel.

Information how to run the GUI via Web-Browser are provided chapter 5.3.

Details to the manual operation of the R&S OSP130 are given in chapter 5.3.

4.2 R&S OSP Setups

All setups which are necessary to perform in the Linux operating system, which is integral part of the R&S OSP120 or OSP130, are to be done via external keyboard and external monitor (not for OSP130).

See chapter 2.7.2 and 2.7.3 of this manual for how to connect these accessories.

Chapter 2.10 gives an example for Linux related actions.

5 Instrument Functions

The following chapter describes the instrument functions of the R&S OSP. The basic instrument R&S OSP is the Platform for Switching and Control Purpose which is completed by several options. The function of the instrument depends on the options (R&S OSP modules) which are fitted in the instrument.

As an overview and for better understanding of the instrument function and the configuration possibilities, the following chapter shows block diagrams of the R&S OSP.

Then there is a description of the available modules for the R&S OSP and their function.

Basic instrument functions like selftest and configuration information are described as well.

5.1 R&S OSP Instrument Frame

The R&S OSP is designed as a 19” unit with two height units. The instruments R&S OSP120 and R&S OSP130 can remotely be controlled via LAN interface.

The R&S OSP120 contains no front elements for manual operation and is therefore only to be used in remote operation.

The R&S OSP130 can operate as a stand-alone instrument thus not requiring remote control. Front panel keys and a display allow local operation. It may also be integrated in remotely controlled systems.

The R&S OSP150 is an extension of the OSP120 or OSP130 allowing more modules to be used. It is connected via CAN bus connected to the rear side of the R&S OSP.

The R&S OSP unit has no switching functions as long as no R&S OSP modules are installed.

Depending on the model, the R&S OSP frame unit can consist of the following blocks:

- Computer LPC8 (Low Profile Controller)
- Mainboard
- Power supply
- Interface for USB/DVI
- Front panel with function keys and a color display screen

Switching functions are added to the R&S OSP frame unit by installation of R&S OSP modules. The R&S OSP offers three slots for installation of R&S OSP modules. The modules are installed from the rear side of the instrument. A maximum of three R&S OSP modules can be configured.

5.1.1 R&S OSP Block Diagram

The following block diagram shows the main functional groups of the R&S OSP120.

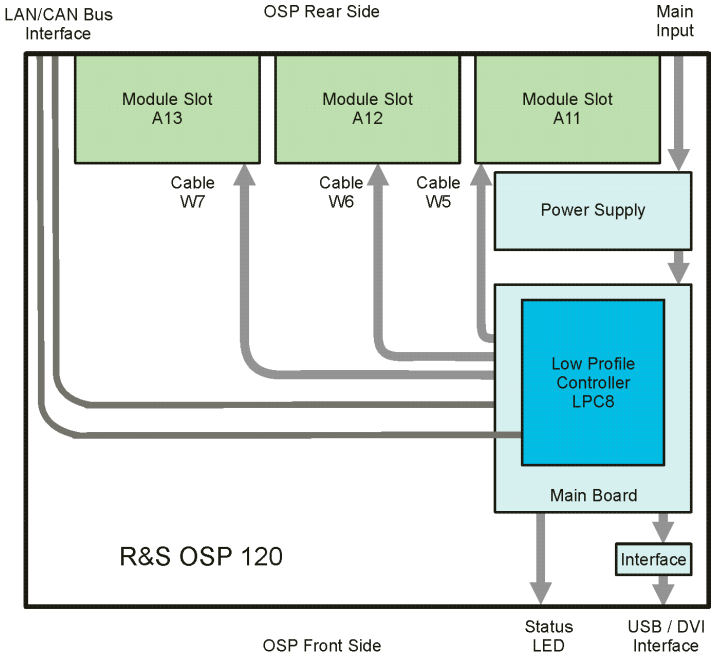

Figure 5-1: Block Diagram R&S OSP120

The central part of the R&S OSP frame is the Low Profile Controller LPC8 with Linux Operating System. The computer handles the external interfaces of the R&S OSP120 such as LAN, USB and DVI. It also serves the internal interfaces in the R&S OSP120 like the control ports for the three slots which can take the R&S OSP modules.

The single board computer is plugged onto the R&S OSP Main Board. The basic component on the mainboard is an FPGA which supplies all necessary interfaces between computer PCI Bus and R&S OSP internal interfaces like the control ports for the R&S OSP modules. The CAN bus which is used to connect further R&S OSP extension units is implemented in the FPGA as well.

The power is supplied by a 175 W switching type power supply. The supply voltage for the R&S OSP modules and their relays is generated by a voltage converter which is placed on the Main Board.

Via a small interface board the connectors of the Low Profile Controller are adapted to the standard interfaces to connect USB devices and the DVI monitor.

The next block diagram shows the main functional groups of the R&S OSP130.

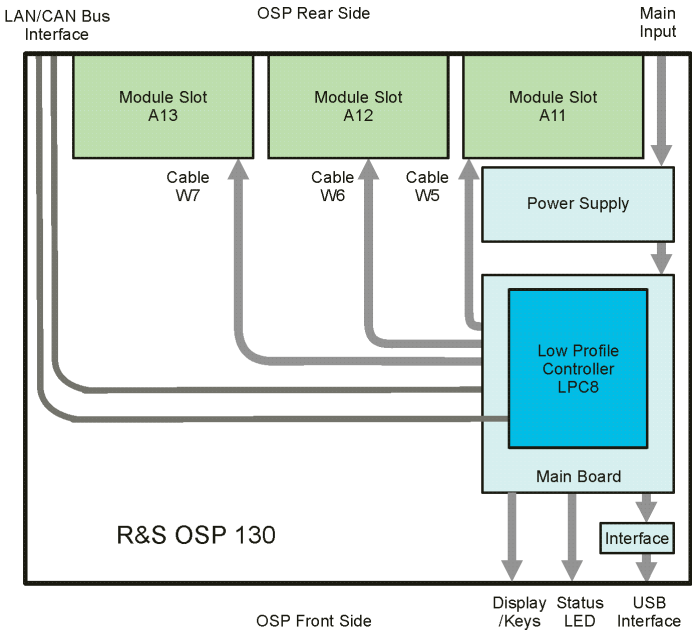

Figure 5-2: Block Diagram R&S OSP130

Additional to the OSP120, in the OSP130 the connection to the front side display unit and keys is available for local operation. No connection to an external monitor is available.

Finally, the block diagram of the OSP150 extension unit shows its main functional blocks:

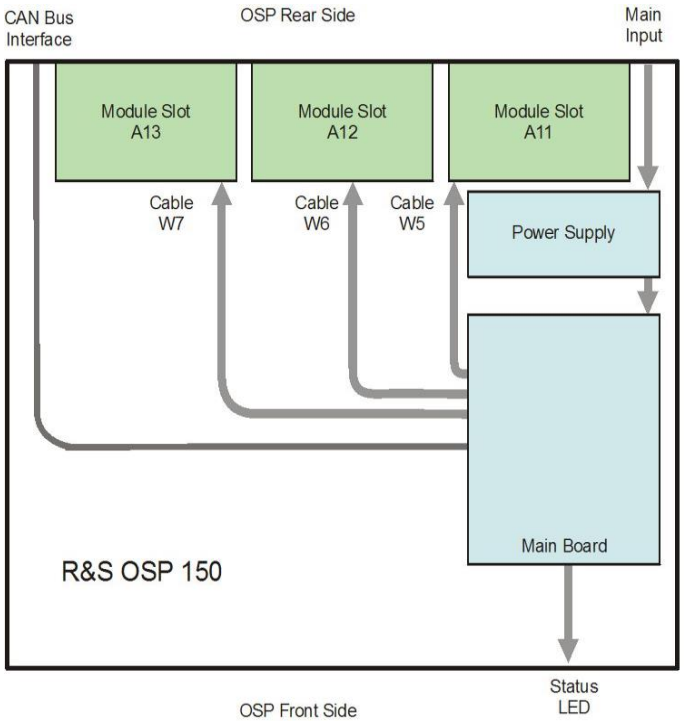

Figure 5-3: Block Diagram R&S OSP150

5.1.2 R&S OSP Module Slots

The R&S OSP offers three slots for installation of R&S OSP modules. The modules are installed from the rear side of the instrument. A maximum of three R&S OSP modules can be configured. If more R&S OSP modules are required, the R&S OSP can be extended by the version R&S OSP150. The extension unit R&S OSP150 is controlled from the R&S OSP120 or OSP130 by CAN bus Interface.

Refer to chapter 8.2 for detailed information on the extension unit R&S OSP150.

Slot A11 Slot A12 Slot A13

Figure 5-4: R&S OSP Module Slots

The slots are designated with A11, A12 and A13. The same order is used when addressing the modules; i.e. R&S OSP module 1 corresponds to slot A11 etc.

In principle the R&S OSP modules can be installed in the slots in any order. A slot which is not occupied will be shown as empty by the OSP Panel application.

NOTICE

Module Slots

The depth of the module slot A11 is limited. Only modules with a depth < 70 mm like the modules R&S OSP-B101, R&S OSP-B102, R&S OSP-B103, R&S OSP-B107, R&S OSP-B111 or R&S OSP-B112 can be operated in this slot!
R&S OSP-B106 can be placed in slots A11+ A12 or A12 + A13.

For installation of the modules see the corresponding installation procedures.

5.1.3 R&S OSP120 Version12 and Module Slots

The R&S OSP120 Version 12 is designed with two slots in the front side in addition to the three slots at the rear side as described above.

Slot A12F Slot A13F

Figure 5-5: R&S OSP120 Version12 Module Slots at front side

Standard Configuration:

The slots in the front side are designated with A12F and A13F. For installation of modules, the following order is defined as standard:

The first module installed from OSP front side always is mounted in slot A13F. From interface point of view it corresponds to slot A13 (connected via cable W7 – see figure below).

The second module installed from OSP front side is mounted in slot A12F. From interface point of view it corresponds to slot A12 (connected via cable W6 – see figure below).

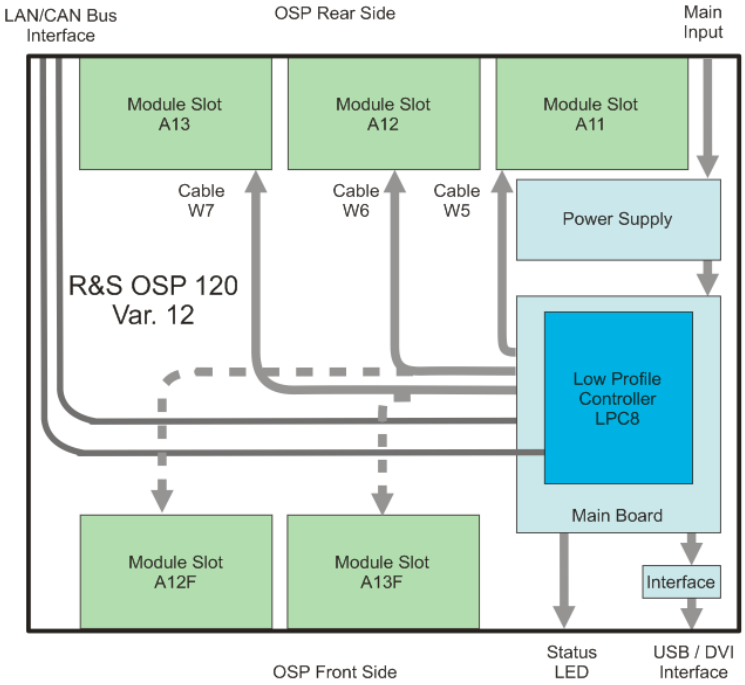

Figure 5-6: Block Diagram R&S OSP120 Var. 12

Configuration of 2-slot modules:

OSP modules with 2-slot size and requiring two interface cables W6 and W7 (like the modules OSP-B106/-B123/-B124/-B132) only can be mounted in A12/A13 or A12F/A13F.

That means with a 2-slot module configured in A12/A13 and one module configured in the OSP front side, only interface cable W5 (corresponding to A11) is left for A13F).

5.1.4 R&S OSP120 Version12 and Modules R&S OSP-B011/-B012

Configuring a system with instruments having the RF connectors at the front panel, the cabling will be made easy having the RF connectors at the OSP120 front side as well. The R&S OSP120 Version 12 is designed with two slots in the front side of the in addition to the three slots at the rear side. Two slots therefore can be used for mounting the options OSP-B011 and/or OSP-B012. See following diagram.

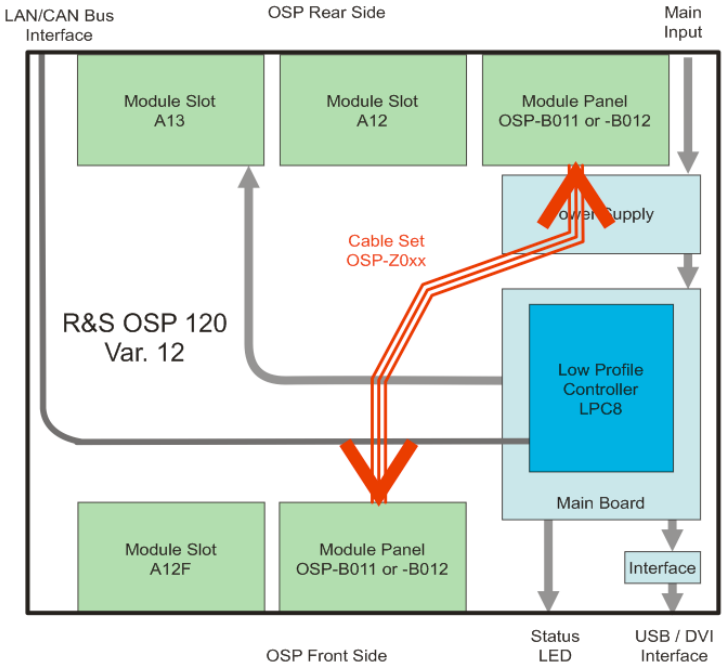

Figure 5-7: Block Diagram R&S OSP120 Var. 12

NOTICE

Installation of Module Panels OSP-B011/-B012

Note that the length of the cable sets OSP-Z010/-Z011/-Z012 is limited for a maximum offset of one module only. That means if one Module Panel is mounted in the slot A13F at the OSP front side, a second Module Panel for example can be installed at the OSP rearside in any one of the three available slots (offset ≤ 1 slot).

But it is not possible to mount one Module Panel in the slot A12F at the OSP front side and a second Module Panel at the OSP rearside in slot A11 (offset > 1 slot)!

5.1.4.1 Module Panel R&S OSP-B011

The module OSP-B011 is a panel (1-slot size) prepared to be fitted with up to twelf coaxial feed-through connectors SMA-female; see below picture.

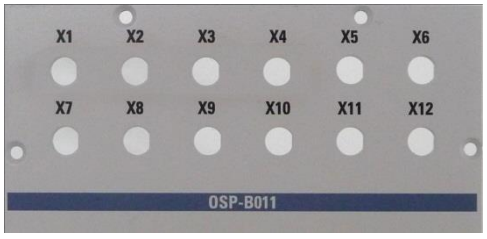

Slot A12F Slot A13F

Figure 5-8: R&S OSP-B011 module panel

For cabling the options OSP-Z11 or Z12 are required. See chapter 5.1.4.3 for details.

5.1.4.2 Module R&S OSP-B012

The module OSP-B012 is a panel (1-slot size) prepared to be fitted with up six coaxial feed-through connectors N-female; see below picture.

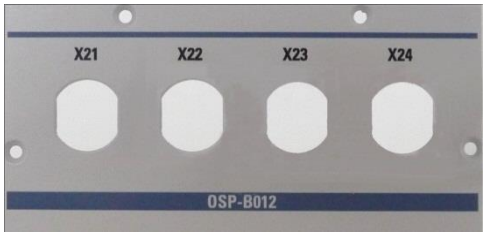

Slot A12F Slot A13F

Figure 5-9: R&S OSP-B011 module panel

For cabling the options OSP-Z11 or Z12 are required. See chapter 5.1.4.3 for details.

5.1.4.3 Cable sets R&S OSP-Z010/-Z011/-Z012

The modules OSP-B011 and/or OSP-B012 can be connected using the cable sets and configurations as shown in the below table.

Module Panel 1	Module Panel 2	Required Cable Set	
OSP-B011	OSP-B011	max 3 x OSP-Z010	
OSP-B012	OSP-B011	OSP-Z011	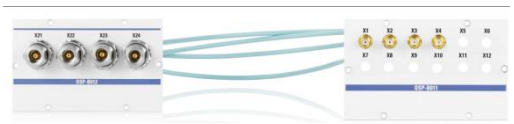
OSP-B012	OSP-B012	OSP-Z012	

All Cable Sets consist out of four coaxial cables fitted with suitable coaxial connectors. The coaxial connectors are bulkhead connector types with round flange. They are fed through the Module panels from rear-side and fixed wuth the cenztral screw.

This way it is not required to open the OSP instrument to mount the options OSP-B010/-B011 and/or –B012 together with the related cable sets.

5.1.5 R&S OSP150 Version15 and Module Slots

The R&S OSP150 Version 15 is designed with two slots in the front side in addition to the three slots at the rear side as described above.

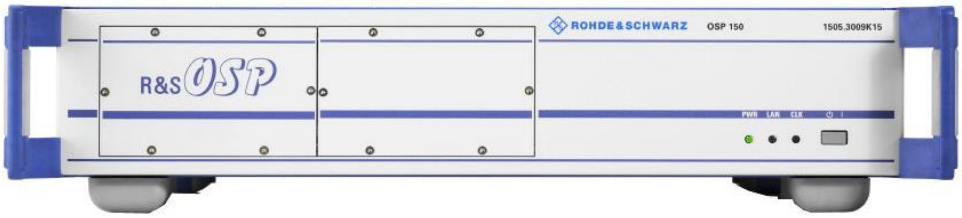

Slot A12F Slot A13F

Figure 5-10: R&S OSP150 Version15 Module Slots at front side

Standard Configuration:

The slots in the front side are designated with A12F and A13F. For installation of modules, the following order is defined as standard:

The first module installed from OSP front side always is mounted in slot A13F. From interface point of view it corresponds to slot A13 (connected via cable W7 – see figure below).

The second module installed from OSP front side is mounted in slot A12F. From interface point of view it corresponds to slot A12 (connected via cable W6 – see figure below).

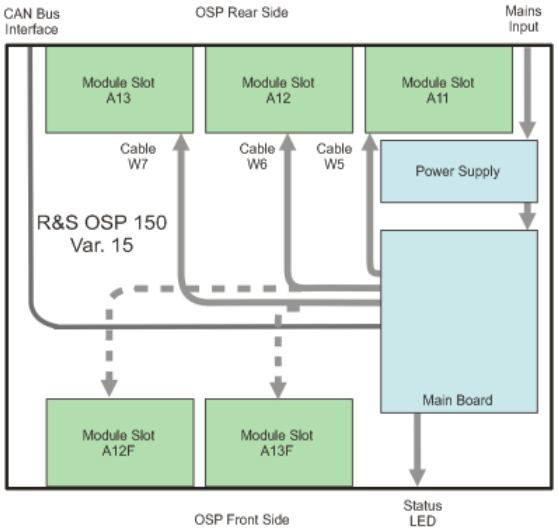

Figure 5-11: Block Diagram R&S OSP150 Var. 15

Configuration of 2-slot modules:

OSP modules with 2-slot size and requiring two interface cables W6 and W7 (like the modules OSP-B106/-B123/-B124/-B132) only can be mounted in A12/A13 or A12F/A13F.

That means with a 2-slot module configured in A12/A13 and one module configured in the OSP front side, only interface cable W5 (corresponding to A11) is left for A13F).

5.1.6 R&S OSP150 Version15 and Modules R&S OSP-B011/-B012

Configuring a system with instruments having the RF connectors at the front panel, the cabling will be made easy having the RF connectors at the OSP150 front side as well.

For configuration and cabling of the modules OSP-B011 and OSP-B012 see chapter 5.1.4.

5.2 Module Functions

As already mentioned, the switching capability is added to the R&S OSP by installation of an R&S OSP module. For the different kind of switching applications, a series of R&S OSP modules is available.

The following chapters describe the function of the R&S OSP modules.

5.2.1 RF Switch Module R&S OSP-B101/-B107/-B111/-B127

The module R&S OSP-B101 and similar as listed above consists of six SPDT switches. All six switches can be operated independently from each other.

The relay is a failsafe type; i.e. an RF connection is provided from the terminal C (Common) to the position NC (normally closed) with no voltage applied to the relay. To maintain an RF connection between the terminal C (Common) and the position NO (normally open), a continuous voltage is to be applied to the relay.

Figure 5-12: Module R&S OSP-B101

The relays are mounted directly in the R&S OSP-B101 front panel. All the RF connectors are SMA female types. All relays are soldered into a printed circuit board; this way the module is of compact size and no cabling to the relays is required.

The R&S OSP-B101 module is supplied with power and controlled from the R&S OSP via a single connector on the R&S OSP-B101 printed circuit board. The connection to the R&S OSP is done via a single connection cable.

The R&S OSP-B101 module is equipped with an on-board memory to store the necessary configuration data of the module.

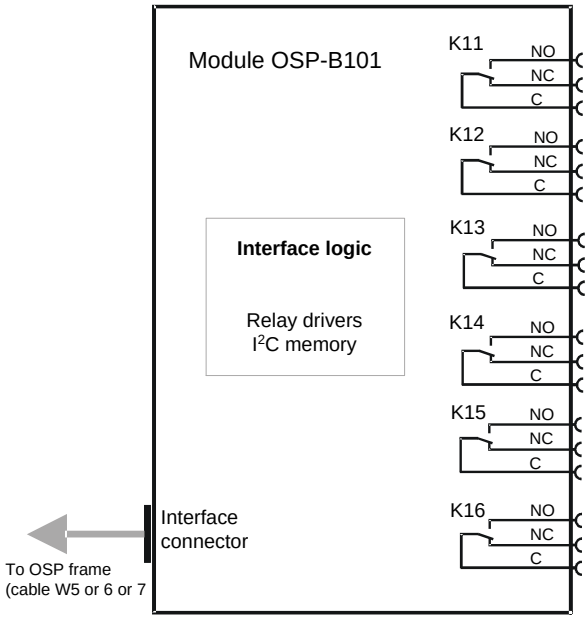

Figure 5-13: Block Diagram Module R&S OSP-B101

When the module R&S OSP-B101 is configured within the R&S OSP, a manual operation of the module can be performed via the OSP Panel. See chapter 3.3.6 for details.
For remote control operation see chapters 6 and 7.

Depending on the required switching application, several modules of the R&S OSP-B101 type can be installed in one R&S OSP.

In the R&S OSP frame a maximum of three modules is possible. If more than three modules are required, the extension unit R&S OSP150 must be used. For further information on the extension unit R&S OSP150 see chapter 8.2.

The description above also applies to the following R&S OSP modules that have a similar relay configuration:

Option	Relay configuration
OSP-B107	6 x SPDT relay, solid state, 6 GHz
OSP-B111	6 x SPDT relay, 40 GHz
OSP-B127	6 x SPDT relay, solid state, terminated, 10 GHz

5.2.2 RF Switch Module R&S OSP-B102/-B112/-B128

The module R&S OSP-B102 and similar as listed above consists of two SP6T switches. Both switches can be programmed independently from each other.

The relay is a failsafe type; i.e. no RF connection is provided from the terminal C (Common) to one of the six terminals when no voltage is applied to the relay. To maintain an RF connection between the terminal C (Common) and one of the six output terminals, a continuous voltage is to be applied to the corresponding power terminal of the relay.

Note that always one out of the six terminals of the relays is allowed to be activated at the same time. When operating the R&S OSP-B102 inside the R&S OSP, the R&S OSP firmware takes care for correctly switching the SP6T relay.

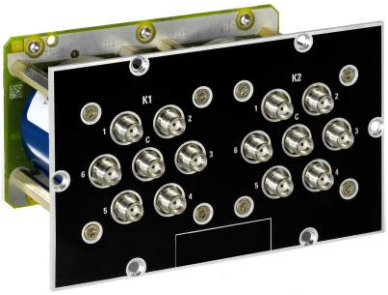

Figure 5-14: Module R&S OSP-B102

The relays are mounted directly in the R&S OSP-B102 front panel. All the RF connectors are SMA female types. All relays are soldered into a printed circuit board; this way the module is of compact size and no cabling to the relays is required.

The R&S OSP-B102 module is supplied with power and controlled from the R&S OSP via a single connector on the R&S OSP-B102 printed circuit board. The connection to the R&S OSP is done via a single connection cable.

The R&S OSP-B102 module is equipped with an on-board memory to store the necessary configuration data of the module.

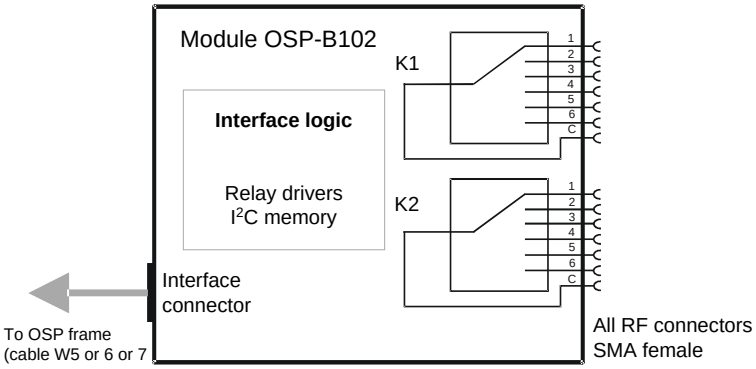

Figure 5-15: Block Diagram Module R&S OSP-B102

When the module R&S OSP-B102 is configured within the R&S OSP, a manual operation of the module can be performed via the OSP Panel. See chapter 3.3.7 for details.

For remote control operation see chapters 6 and 7.

Depending on the required switching application, several modules of the R&S OSP-B102 type can be installed in one R&S OSP.

In the R&S OSP frame a maximum of three modules is possible. If more than three modules are required, the extension unit R&S OSP150 must be used. For further information on the extension unit R&S OSP150 see chapter 8.2.

The description above also applies to the following R&S OSP modules that have a similar relay configuration:

Option	Relay configuration
OSP-B112	2 x SP6T relay, 40 GHz
OSP-B128	Up to 3 x SP6T relay, solid state, terminated, 10 GHz

The module R&S OSP-B128 can be configured with up to three SP6T relays. The relay configuration is with all SMA connectors in-line (flat relay design). See the following picture.

Figure 5-16: Module R&S OSP-B128

The actual number of SP6T relays fitted in the OSP-B128 can be read from the module via I2C interface. The R&S OSP automatically recognizes the actual configuration.

Please note that the relays always must be configured starting from position K1 onwards. In the above picture two relays are fitted; the openings for K3 are covered by a sheet metal strip.

5.2.3 I/O Module R&S OSP-B103

The module R&S OSP-B103 is a digital I/O module consisting of a 16 bit input and a 16 bit output port.

The input ports are available on the upper D-Sub connector. The input port can be read at any time. Each input is protected with low-pass and diode against transients.

The output ports are accessible on the lower D-Sub connector. Each output channel is designed as a FET driver switching to GND when activated. Each output is protected with diode against transients which may occur when switching inductive loads such as relay coils.

All output lines can be programmed independently from each other.

Figure 5-17: Module R&S OSP-B103

The R&S OSP-B103 module is supplied with power and controlled from the R&S OSP via a single connector on the R&S OSP-B103 printed circuit board. The connection to the R&S OSP is done via a single connection cable.

The R&S OSP-B103 module is equipped with an on-board memory to store the necessary configuration data of the module.

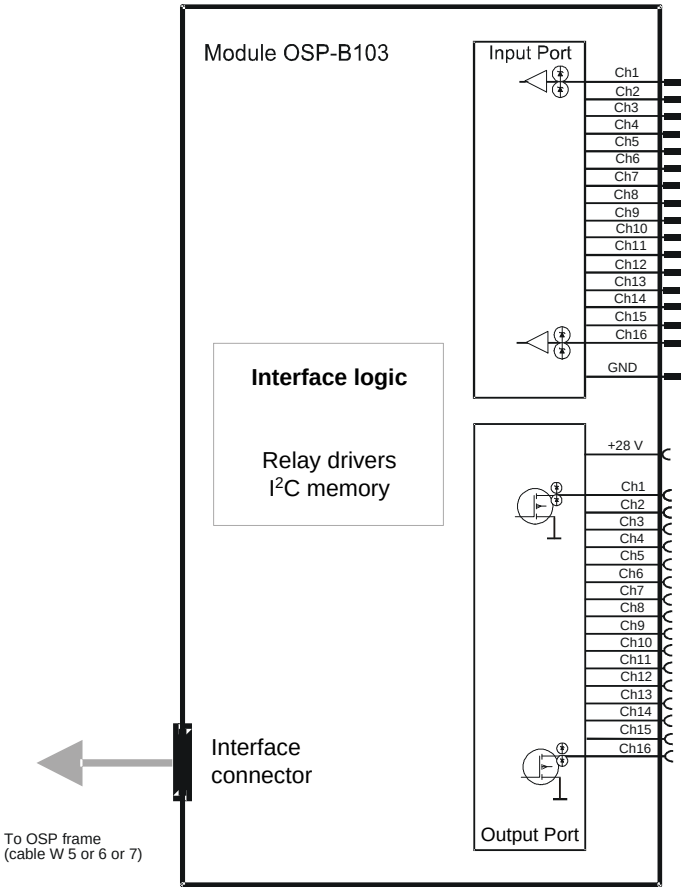

Figure 5-18: Block Diagram Module R&S OSP-B103

When the module R&S OSP-B103 is configured within the R&S OSP, a manual operation of the module can be performed via the OSP Panel. See chapter 3.3.10 for details.
For remote control operation see chapters 6 and 7.

See chapter 9.2.3 for details on the connector pin assignments.

Depending on the required application, several modules of the R&S OSP-B103 type can be installed in one R&S OSP.

In the R&S OSP frame a maximum of three modules is possible. If more than three modules are required, the extension unit R&S OSP150 must be used. For further information on the extension unit R&S OSP150 see chapter 8.2.

5.2.4 I/O Module R&S OSP-B104

The module R&S OSP-B104 is a digital I/O module for special applications in EMS measurements.

Figure 5-19: Module R&S OSP-B104

It consists of input / output ports allowing control of up to four external power transfer relays, models Spinner BN 51 26 70 (7-16 connectors) or BN 64 00 75 (EIA 1 5/8" flange connectors). In addition, some lines of the ports are made available at an IN / OUT connector.

Transfer switch

The transfer relays are switched by control lines exhibiting a pulse rather than a constant level. For that reason two lines are required to set the switch to each position. Note that the state of the switch does not change state when the R&S OSP is turned on (reset condition).

The Spinner transfer relays support the "carrier safety contact" concept. While turning from one position to the other, this contact opens. If included in the interlock, the power amplifier connected to the interlock control will be deactivated while the relay is turning. In the final position the carrier safety contact closes again, thus closing the full interlock chain. The power amplifier then can also be put into operate mode again.

The relays have a contact indicating the position. This line is read from the module and used to display and verify the current status.

Delay time for Transfer switch

The transfer relays may have a settling time which cannot be neglected. Per default a delay time of 100 msec is set up for the OSP-B104 module. The delay time allows the relay to reach it's final position before the new position is read back. Refer to chapter 7.4.3 for further information on how to change the delay time for the OSP-B104 relays.

In the lower part of the module, on the outside of the lower RELAY connectors, there are four LEDs labeled PWR 1 to PWR 4. If an LED shows a green light, the power is OK. If the LED is off, there is a problem with the power on the corresponding connector. In such a case, please turn off the OSP, try to correct for a possible fault in the cabling or connected relay, turn the OSP back on and check the LED again.

In the middle between the lower RELAY connectors there are two more LEDs. The upper of the two is labeled PWR I/O and gives a status information on the power for the I/O connector. If the LED shows a green light, the power is OK. If the LED is off,

there is a problem with the power on the corresponding connector. In such a case, please turn off the OSP, try to correct for a possible fault in the cabling or the connected device, turn the OSP back on and check the LED again.

The LED below indicates the status of the interlock (pins 7 and 15). If there is no connection between these two pins, or if any of the RELAY connectors does not connect its pins 3 and 4 (bridge at the connector or carrier safety status of the connected relay), the LED will show a red light indicating an open interlock. The LED being off indicates that the interlock is closed.

The input ports are available on the upper D-Sub connector IN / OUT. The input port can be read at any time. Each input is protected with low-pass and diode against transients.

The output ports are also accessible on the upper D-Sub connector IN / OUT. Each output channel is designed as a FET driver switching to GND when activated. Each output is protected with diode against transients which may occur when switching inductive loads such as relay coils. All output lines can be programmed independently from each other.

The R&S OSP-B104 module is supplied with power and controlled from the R&S OSP via one supply and one control connector on the R&S OSP-B104 printed circuit board. The connection to the R&S OSP is done via those two connection cables.

The R&S OSP-B104 module is equipped with an on-board memory to store the necessary configuration data of the module.

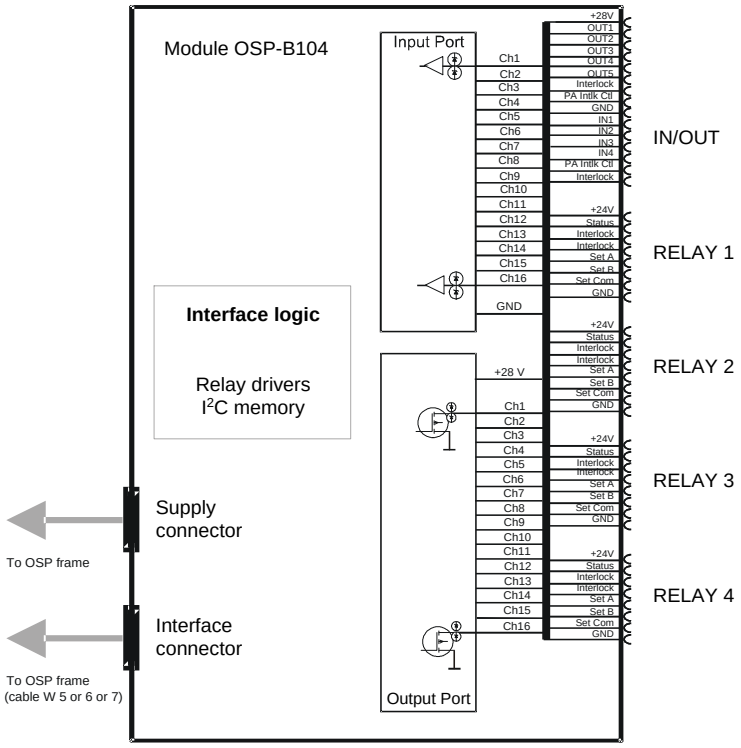

Figure 5-20: Block Diagram Module R&S OSP-B104

When the module R&S OSP-B104 is configured within the R&S OSP, a manual operation of the module can be performed via the OSP Panel. See chapter 3.3.10 for details.

For remote control operation see chapters 6 and 7.
See chapter 9.2.4 for details on the connector pin assignments.

Depending on the required application, several modules of the R&S OSP-B104 type can be installed in one R&S OSP.

In the R&S OSP frame a maximum of two modules is possible, due to the size of the module it only can be installed in slots A12 or A13. If more than two modules are required, the extension unit R&S OSP150 must be used. For further information on the extension unit R&S OSP150 see chapter 8.2.

5.2.5 RF Switch Module R&S OSP-B106/-B132

The module R&S OSP-B106 consists of three SPDT switches with N connectors and three SPDT switches with BNC connectors.

All six switches can be operated independently from each other.

The relays are a failsafe type; i.e. an RF connection is provided from the terminal C (Common) to the position NC (normally closed) with no voltage applied to the relay. To maintain an RF connection between the terminal C (Common) and the position NO (normally open), a continuous voltage is to be applied to the relay.

Figure 5-21: Module R&S OSP-B106

The relays are mounted directly in the R&S OSP-B106 front panel. Three of the relays (K1 to K3) have N type connectors and are suited for frequencies up to 12 GHz. The other three (K4 to K6) have BNC connectors and may be used up to 900 MHz or for DC currents of up to 2 A at a maximum voltage of 30 V. There are no additional RF cables inside the module.

The R&S OSP-B106 module is supplied with power and controlled from the R&S OSP via a single connector on the R&S OSP-B106 printed circuit board. The connection to the R&S OSP is done via a single connection cable.

The R&S OSP-B106 module is equipped with an on-board memory to store the necessary configuration data of the module.

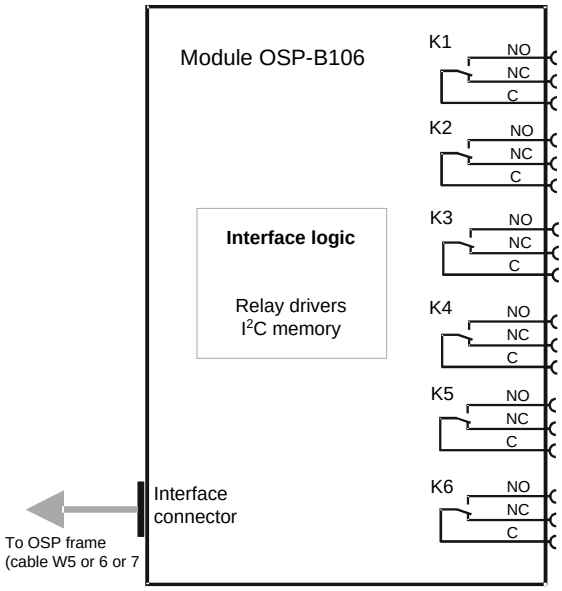

Figure 5-22: Block Diagram Module R&S OSP-B106

When the module R&S OSP-B106 is configured within the R&S OSP, a manual operation of the module can be performed via the OSP Panel. See chapter 3.3.6 for details.

For remote control operation see chapters 6 and 7.
See chapter 9.2.6 for details on the connector pin assignments.

The module OSP-B106 has a double width. Therefore only one module can be installed in one R&S OSP frame. If more than one module is required, the extension unit R&S OSP150 must be used. For further information on the extension unit R&S OSP150 see chapter 8.2.

The description above also applies to the following R&S OSP modules that have a similar relay configuration:

Option	Relay configuration
OSP-B132	6 x SPDT relay with N-Connectors, 12 GHz

5.2.6 DC MUX Module R&S OSP-B108

The module R&S OSP-B108 is a four pole one to six multiplexer for DC.
It is controlled equivalent to first Relay K11 of R&S OSP-B102.

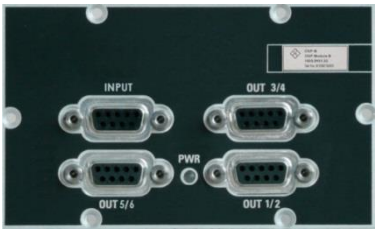

Figure 5-23: Module R&S OSP-B108

The R&S OSP-B108 module is supplied with power and controlled from the R&S OSP via a single connector on the R&S OSP-B108 printed circuit board.

5.2.7 RF Switch Module R&S OSP-B121 and R&S OSP-B121H

The module R&S OSP-B121 is designed as a universal switching module using terminated RF relays. The OSP-B121 contains the following relay configuration:

3 x SPDT switches (terminated)

The module is designed for independent control of all relay.

The relay is a failsafe type; i.e. a RF connection is provided from the terminal C (Common) to the position NC (normally closed) with no voltage applied to the relay. To maintain a RF connection between the terminal C (Common) and the position NO (normally open), a continuous voltage is to be applied to the relay.

Figure 5-24: Module R&S OSP-B121

The relays are mounted directly in the OSP-B121 front panel. All the RF connectors are SMA female types. All relays are connected via a short cable to a printed circuit board; this way the module is of compact size.

The OSP-B121 module is supplied with power and controlled from the OSP120 via a single connector on the OSP-B121 printed circuit board. The connection to the OSP120 is done via a single connection cable.

The OSP-B121 module is equipped with on board memory to store the necessary configuration data of the module.

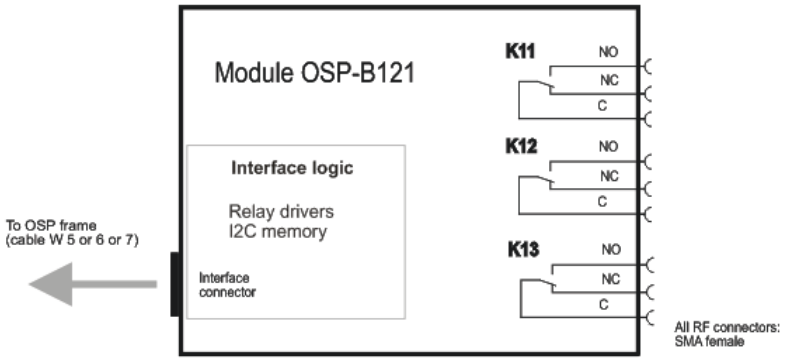

Figure 5-25: Block diagram Module R&S OSP-B121

When the module OSP-B121 is configured within the OSP120, a manual operation of the module can be performed via the OSP Panel. See chapter 3.3 for details.

For remote control operation see chapters 6 and 7.

Depending on the required switching application, several modules of the OSP-B121 type can be installed in one OSP120.

In the OSP frame a maximum of three modules is possible. If more than three modules are required, the extension unit OSP150 must be used. For further information on the extension unit OSP150 see chapter 8.2

The description above also applies to the following R&S OSP modules that have a similar relay configuration:

Option	Relay configuration
OSP-B121H	3 x SPDT relay with PC 2.92 mm connectors, 40 GHz, terminated

5.2.8 RF Switch Modules R&S OSP-B122, OSP-B122H and OSP-B133

The module R&S OSP-B122 is designed as a universal switching module using terminated RF relays. The OSP-B122 contains the following relay configuration:

1 x SP6T switch (terminated), SMA connectors, maximum frequency 18 GHz

The relay is a failsafe type; i.e. no RF connection is provided from the terminal C (Common) to one of the six terminals when no voltage is applied to the relay. To maintain a RF connection between the terminal C (Common) and one of the six output terminals, a continuous voltage is to be applied to the corresponding power terminal of the relay.

Note that always one out of the six terminals of the relays is allowed to be activated at the same time. When operating the OSP-B122 inside the OSP, the OSP firmware takes care for correct switching of the SD6T relay.

Figure 5-26: Module R&S OSP-B122

The relay is mounted directly in the OSP-B122 front panel. All the RF connectors are SMA female types. The relay is connected via a short cable to a printed circuit board; this way the module is of compact size.

The OSP-B122 module is supplied with power and controlled from the OSP120 via a single connector on the OSP-B122 printed circuit board. The connection to the OSP120 is done via a single connection cable.

The OSP-B122 module is equipped with on board memory to store the necessary configuration data of the module.

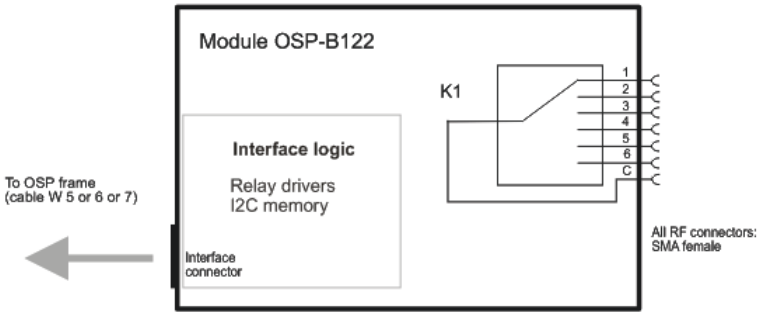

Figure 5-27: Block diagram Module R&S OSP-B122

When the module OSP-B122 is configured within the OSP120, a manual operation of the module can be performed via the OSP Panel. See chapter 3.3 for details.

For remote control operation see chapters 6 and 7.

Depending on the required switching application, several modules of the OSP-B122 type can be installed in one OSP120.

In the OSP frame a maximum of three modules is possible. If more than three modules are required, the extension unit OSP150 must be used. For further information on the extension unit OSP150 see chapter 8.2.

The description above also applies to the following R&S OSP options (modules) that have a similar relay configuration:

Option	Relay configuration
OSP-B122H	1 x SP6T relay with PC 2.92 mm connectors, 40 GHz, terminated
OSP-B133	1 x SP6T relay with N connectors, 12.4 GHz

5.2.9 RF Switch Module R&S OSP-B123 and R&S OSP-B124

The module R&S OSP-B123/124 is designed as a universal switching module using terminated RF relays. The OSP-B123/124 contains the following relay configuration:

OSP-B123	OSP-B124
6 x SPDT switches (terminated)	3 x SPDT switches (terminated)
1 x SP6T switches (terminated)	2 x SP6T switches (terminated)

The module is designed for independent control of all relay.

The relay is a failsafe type. In case of the SP6T relay, no RF connection is provided from the terminal C (Common) to one of the six terminals when no voltage is applied to

the relay. To maintain a RF connection between the terminal C (Common) and one of the six output terminals, a continuous voltage is to be applied to the corresponding power terminal of the relay.

In case of the SPDT relay, a RF connection is provided from the terminal C (Common) to the position NC (normally closed) with no voltage applied to the relay. To maintain a RF connection between the terminal C (Common) and the position NO (normally open), a continuous voltage is to be applied to the relay.

Note that for the SP6T relay only one out of the six terminals is allowed to be activated at the same time. When operating the OSP-B123/124 inside the OSP, the OSP firmware takes care for correct switching of the SD6T relay.

Figure 5-28: Module R&S OSP-B123

Figure 5-29: Module R&S OSP-B124

All relays are is mounted directly in the OSP-B123/124 front panel. All the RF connectors are SMA female types. All relays are connected via a short cable to a printed circuit board; this way the module is of compact size.

The OSP-B123/124 module is supplied with power and controlled from the OSP120 via a single connector on the OSP-B123/124 printed circuit board (OSP-B123 has got two boards). The connection to the OSP120 is done via one (OSP-B123) or two (OSP-B124) connection cables.

The OSP-B123/124 module is equipped with on board memory to store the necessary configuration data of the module.

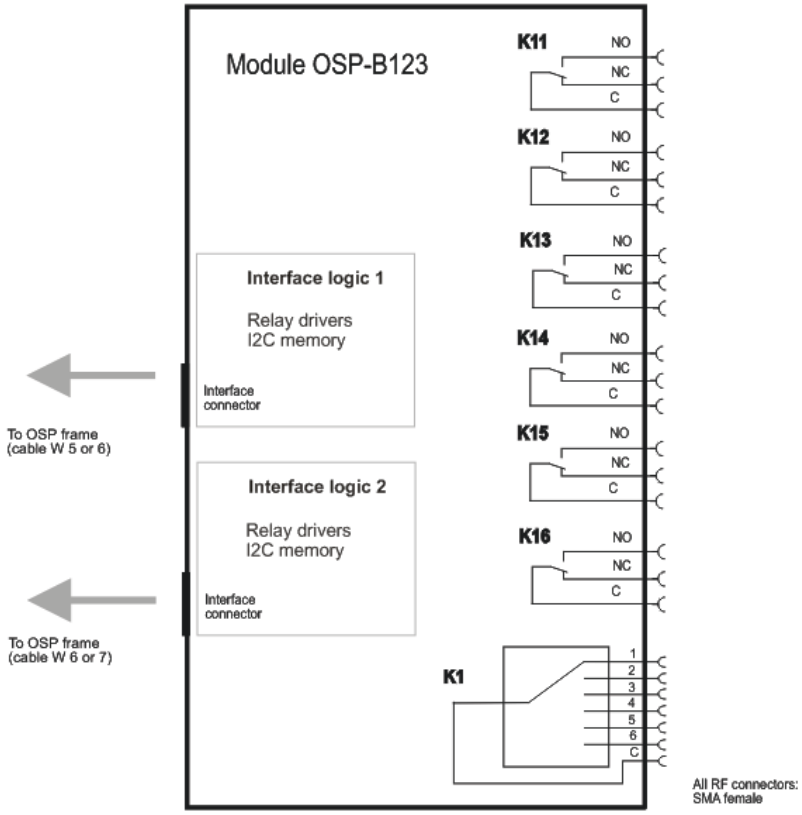

Figure 5-30: Block diagram Module R&S OSP-B123

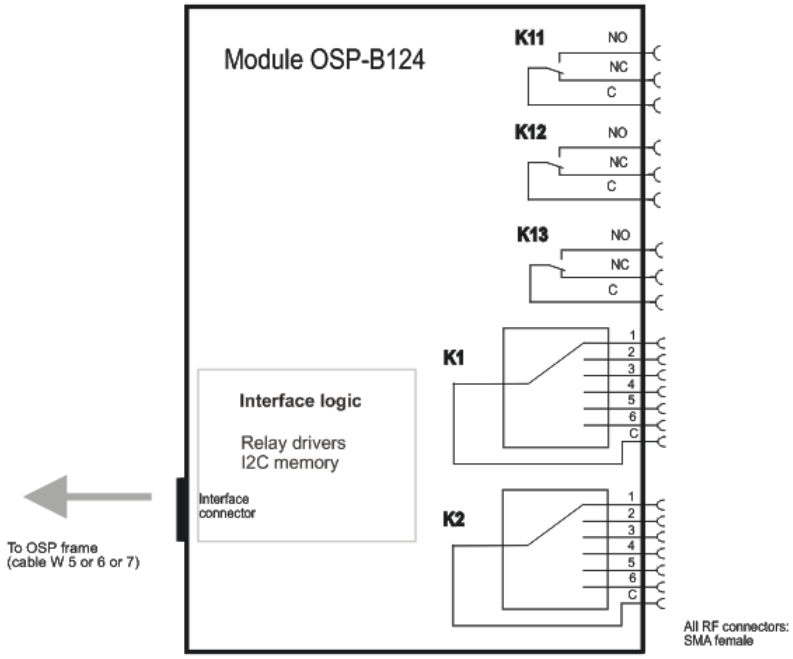

Figure 5-31: Block diagram Module R&S OSP-B124

When the module OSP-B123/124 is configured within the OSP120, a manual operation of the module can be performed via the OSP Panel. See chapter 3.3 for details.
For remote control operation see chapters 6 and 7.

The OSP-B123/124 is a two-slot module. Within one OSP120 only one module of this type can be installed.

The OSP frame offers a maximum of three slots. If more than one OSP-B123/124 are required, the extension unit OSP150 must be used. For further information on the extension unit OSP150 see chapter 8.2.

5.2.10 RF Switch Module R&S OSP-B125 and R&S OSP-B126

The module R&S OSP-B125/126 is designed as a universal switching module using terminated RF relays. The OSP-B125/126 contains the following relay configuration:

OSP-B125	OSP-B126
6 x SPDT switches (terminated) 3 x SP6T switches (terminated)	3 x SP6T switches (terminated)

The module is designed for independent control of all relays.

The relays are failsafe type. In case of the SP6T relay, no RF connection is provided from the terminal C (Common) to any one of the six terminals when no voltage is applied to the relay. To maintain a RF connection between the terminal C (Common) and one of the six output terminals, a continuous voltage is to be applied to the corresponding power terminal of the relay.

In case of the SPDT relay, an RF connection is provided from the terminal C (Common) to the position NC (normally closed) with no voltage applied to the relay. To maintain a RF connection between the terminal C (Common) and the position NO (normally open), a continuous voltage is to be applied to the relay.

Note that for the SP6T relay only one out of the six terminals is allowed to be activated at the same time. When operating the OSP-B125/126 inside the OSP, the OSP firmware takes care of correct switching of the SD6T relay.

Figure 5-32: Module R&S OSP-B125

Figure 5-33: Module R&S OSP-B126

All relays are mounted directly in the OSP-B125/126 front panel. The RF connectors of the OSP-B125/126 are SMA female type. Be aware that the RF connectors of the OSP-B125E are PC 3.5 mm female type (geometrically compatible with SMA), while the RF connectors of the OSP-B125H are PC 2.92 mm female type. All relays are connected via a short cable to a printed circuit board; this way the module is of compact size.

The OSP-B125/126 module is supplied with power and controlled from the OSP120 via two printed circuit boards mounted on the OSP-B125/126. The connection to the OSP120 is done via a two connection cables. The OSP-B125/126 module is equipped with on board memory to store the necessary configuration data of the module.

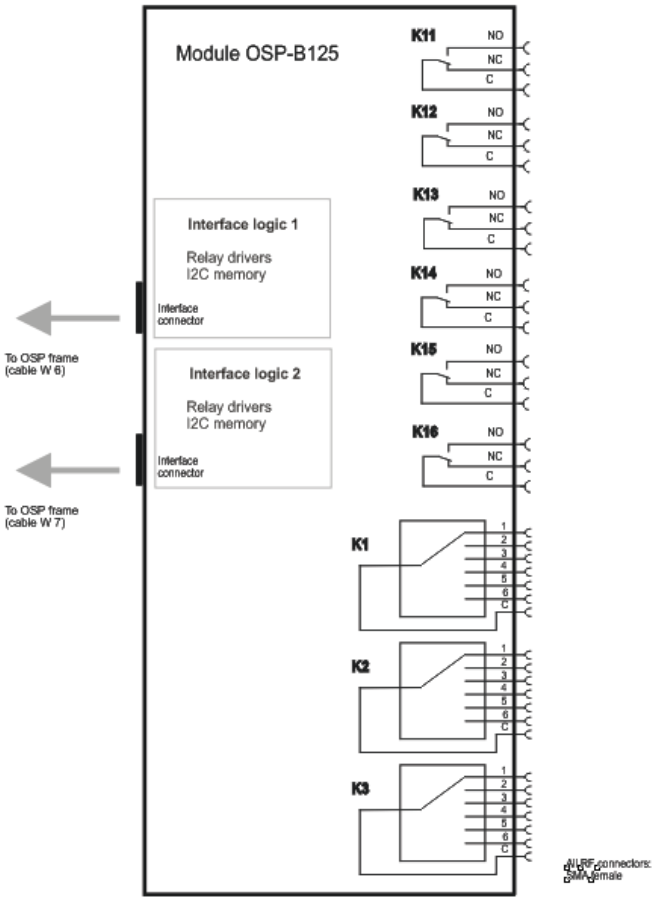

Figure 5-34: Block diagram Module R&S OSP-B125

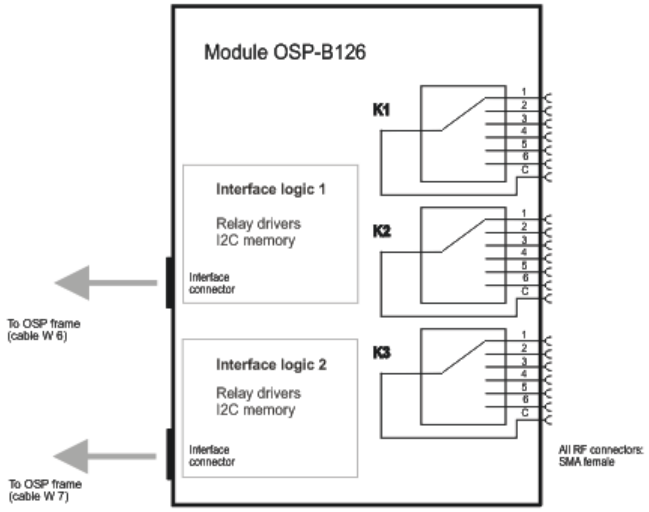

Figure 5-35: Block diagram Module R&S OSP-B126

When the module OSP-B125/126 is configured within the OSP120, a manual operation of the module can be performed via the OSP Panel. See chapter 3.3 for details.
For remote control operation see chapters 6 and 7.

The OSP-B125/126 is a three-slot module. Within one OSP120 only one module of this type can be installed.

If more than one OSP-B125/126 are required, the extension unit OSP150 must be used. For further information on the extension unit OSP150 see chapter 8.2.

The description above also applies to the following R&S OSP modules that have a similar relay configuration:

Option	Relay configuration	Frequency range
OSP-B125E	6 x SPDT switches (terminated) 3 x SP6T switch (terminated)	DC to 26.5 GHz, connectors PC 3.5 mm (female)
OSP-B125H	6 x SPDT switches (terminated) 3 x SP6T switch (external terminated)	DC to 40 GHz, connectors PC 2.92 mm (female)

5.2.11 Module R&S OSP-B114 for EMS application

The module R&S OSP-B114 is intended for applications in small or medium systems for Electromagnetic Susceptibility (EMS). The module fulfills the following tasks:

- Switching of the output of two power amplifiers to one or two transmit antennas (or other kind of transducers).
- Providing the circuitry for an interlock loop with the following functions:
  - monitoring a interlock loop and read/display the actual status
  - power down external amplifiers depending on interlock status

  - disconnect the signal generator from power amplifier (if they cannot be powered down) depending on interlock status
- Four output lines. Can be used to control the polarization of the transmitting antennas
- Four input lines

Figure 5-36: Module R&S OSP-B114

The relay K1 with N-connectors is a DPDT type. When not activated (no voltage applied to the relay) and after Reset, the terminals 1 - 2 and 3 - 4 are connected. When activated, the terminals 1 - 3 and 2 -4 are connected.

The SPDT relay (K5) with SMA connectors is controlled by the interlock. With interlock loop open, a RF connection is provided from the terminal C (Common) to the position NC (normally closed).
With interlock loop closed, a RF connection is provided between the terminal C (Common) and the position NO (normally open).

The interlock status is shown by the red LED on the module front panel, too.

Red LED switched on → Interlock loop is open
switched off → Interlock loop is closed

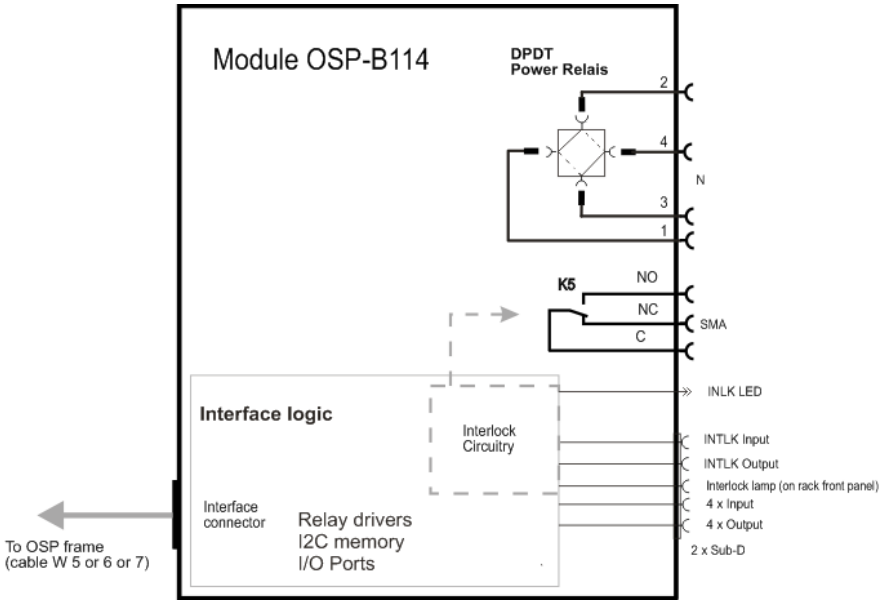

Figure 5-37: Block diagram Module R&S OSP-B114

When the module R&S OSP-B114 is configured within the R&S OSP, a manual operation of the module can be performed via the OSP Panel. See chapter 3.3.10 for details.
For remote control operation see chapters 6 and 7.

For details in the application of this module see chapter 8.6.
See chapter 9.2.4 for details on the connector pin assignments.

5.2.12 RF Switch Module R&S OSP-B131

The module R&S OSP-B131 is designed for high power RF switching. The OSP-B131 contains the following relay configuration:

- 2 x SPDT switches with N-connectors

The module is designed for independent control of both relays.

The relay is a failsafe type; i.e. a RF connection is provided from the terminal C (Common) to the position NC (normally closed) with no voltage applied to the relay. To maintain a RF connection between the terminal C (Common) and the position NO (normally open), a continuous voltage is to be applied to the relay.

Figure 5-38: Module R&S OSP-B131

The relays are mounted directly in the OSP-B131 front panel. All the RF connectors are N female types. All relays are connected via a short cable to a printed circuit board; this way the module is of compact size.

The OSP-B131 module is supplied with power and controlled from the OSP120 via a single interface connector on the OSP-B131 printed circuit board. The connection to the OSP120 is done via a single connection cable.

The OSP-B131 module is equipped with on board memory to store the necessary configuration data of the module.

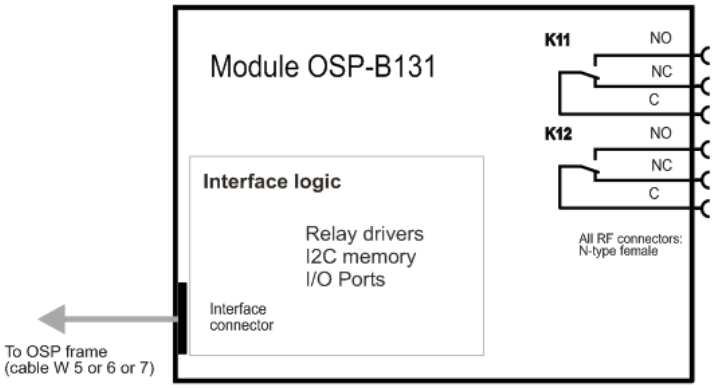

Figure 5-39: Block diagram Module R&S OSP-B131

When the module OSP-B131 is configured within the OSP120, a manual operation of the module can be performed via the OSP Panel. See chapter 3.3 for details.
For remote control operation see chapters 6 and 7.

Depending on the required switching application, several modules of the OSP-B131 type can be installed in one OSP120.

In the OSP frame a maximum of three modules is possible. If more than three modules are required, the extension unit OSP150 must be used. For further information on the extension unit OSP150 see chapter 8.2.

5.2.13 RF Switch Module R&S OSP-B129 and R&S OSP-B119

The module R&S OSP-B129 is designed as a universal switching module using one terminated SP8T relay and two SPDT relays.
The module is designed for independent control of all relay.

The relay is a failsafe type. In case of the SP8T relay, no RF connection is provided from the terminal C (Common) to one of the six terminals when no voltage is applied to the relay. To maintain a RF connection between the terminal C (Common) and one of the six output terminals, a continuous voltage is to be applied to the corresponding power terminal of the relay.

In case of the SPDT relay, a RF connection is provided from the terminal C (Common) to the position NC (normally closed) with no voltage applied to the relay. To maintain a RF connection between the terminal C (Common) and the position NO (normally open), a continuous voltage is to be applied to the relay.

Note that for the SP8T relay only one out of the eight terminals is allowed to be activated at the same time. When operating the OSP-B129 inside the OSP, the OSP firmware takes care for correct switching of the SD8T relay.

Figure 5-40: Module R&S OSP-B119 and R&S OSP-B129

All relays are mounted directly in the OSP-B129 front panel. All the RF connectors are SMA female types. All relays are connected via a short cable to a printed circuit board; this way the module is of compact size.
The OSP-B129 module is supplied with power and controlled from the OSP120 via a single connector on the OSP-B129 printed circuit board. The connection to the OSP120 is done via one connection cable.
The OSP-B129 module is equipped with on board memory to store the necessary configuration data of the module.

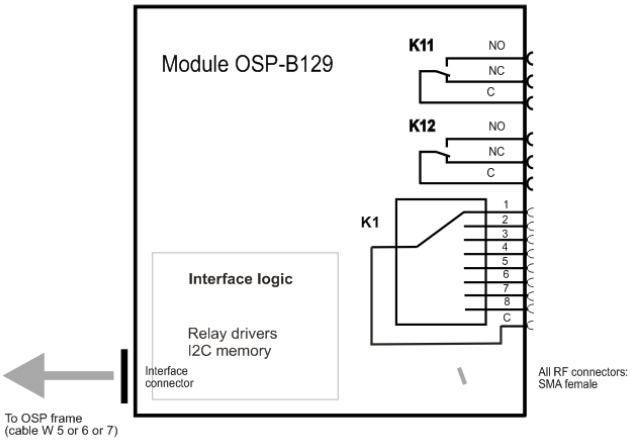

Figure 5-41: Block diagram Module R&S OSP-B129

When the module OSP-B129 is configured within the OSP120, a manual operation of the module can be performed via the OSP Panel. See chapter 3.3 for details.
For remote control operation see chapters 6 and 7.

The OSP-B129 is a one-slot module. Within one OSP120 up to three modules of this type can be installed.
The OSP frame offers a maximum of three slots. If more than one OSP-B129 are required, the extension unit OSP150 must be used. For further information on the extension unit OSP150 see chapter 8.2.

The description above also applies to the following R&S OSP modules that have a similar relay configuration:

Option	Relay configuration

OSP-B119	1 x SP8T relay, non terminated 2 x SPDT relay, non terminated

5.2.14 Power Sensor Module R&S OSP-PM-I

The module R&S OSP-PM-I allows to integrate a Power Sensor within the R&S OSP. The module R&S OSP-PM-I includes one N-type feed-through connector and one USB Adapter, both mounted in the modules front panel.

The module needs to be completed with a Power Sensor of the R&S family NRP-Zxx. It is recommended to use a power sensor version with short cable (for example R&S NRP-Z211 with Id. No. 1417.0409.04).

The module R&S OSP-PM-I is designed with base plate, where the Power Sensor together with cable is fitted. The Power Sensor with its N-type connector is directly screwed to the modules N-type feed-through connector. The Power Sensor is controlled via USB interface. The Power Sensors USB connector (Odumac L-series with 6 pins) is connected to the USB Adapter. The USN adapter serves as filter at the same time.

Figure 5-42: Module R&S OSP-PM-I

The module R&S OSP-PM-I just is used as housing for the Power Sensor. There is no connection to R&S OSP internal interface. See following block diagram.

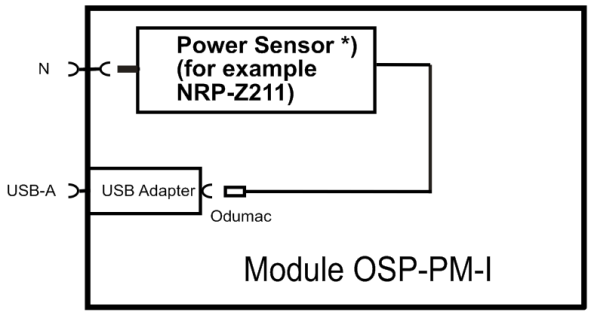

***) Power Sensor is not part of the module OSP-PM-I**

Figure 5-43: Block diagram Module R&S OSP-PM-I

The R&S OSP-PM-I is a one-slot module. Within one R&S OSP120 up to three modules of this type can be installed.

5.2.15 RF Switch Module R&S OSP-B116/-B116H and R&S OSP-B136

The module R&S OSP-B116/-B116H and B136 are designed as a universal switching modules using two transfer switches DPDT.

The modules are designed for independent control of both relays.

The module R&S OSP-B116 is configured with two transfer relays and SMA connector type, the R&S OSP-B136 with two transfer relays and N connector type.

The module version OSP-B116H is also configured with two transfer relays, but with PC 2.92 mm connector and ranging up to 40 GHz.

When not activated (no voltage applied to the relay) and after Reset, the terminals 1 - 2 and 3 - 4 are connected.
When activated, the terminals 1 - 3 and 2 -4 are connected.

Both the modules R&S OSP-B116/-136 module is equipped with on board memory to store the necessary configuration data of the module.configuration data of the module.

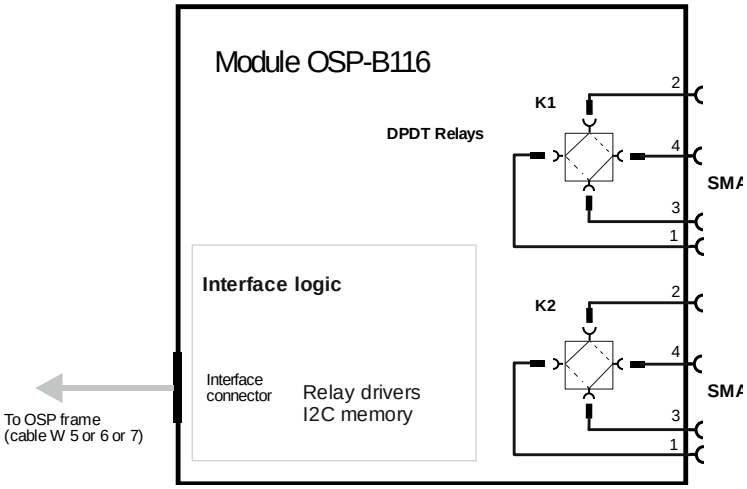

Figure 5-44: Block diagram Module R&S OSP-B116

The module R&S OSP-B136 is equipped with N-connector relays.See following pictures.

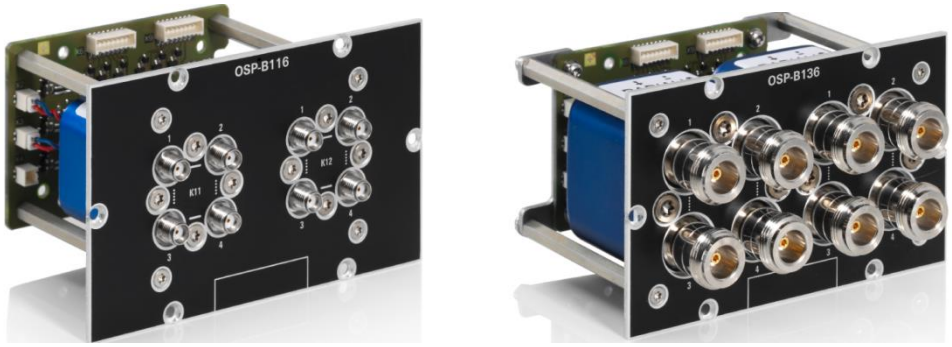

Figure 5-45: Module R&S OSP-B116 and R&S OSP-B136

When the module R&S OSP-B116/-136 is configured within the R&S OSP, a manual operation of the module can be performed via the OSP Panel. See chapter 3.3.10 for details.

For remote control operation see chapters 6 and 7.
For details in the application of this module see chapter 8.6.
See chapter 9.2.4 for details on the connector pin assignments.

The R&S OSP-B116/-136 is a one-slot module. Within one OSP base unit up to three modules of this type can be installed.

5.2.16 RF Switch Module R&S OSP-B101L/-B111xL and R&S OSP-B102L/-B112UL

The modules R&S OSP-B101L, R&S OSP-B111UL/VL and R&S OSP-B102L/-B112UL are designed as a universal RF switch modules using latched relay types.

In comparison to the OSP-B102L, the module OSP-B112UL only houses one SP6T switch, but ranging up to 50 GHz.

The latching relay type will maintain a choosen RF connection wether voltage is maintained or not after switching is accomplished. The relay switching is done by applying a voltage pulse to the relay; after that no energy is consumed by this relay type.

Figure 5-46: Module R&S OSP-B101L and R&S OSP-B102L

The relays are mounted directly in the module front panel. All the RF connectors are SMA female types. All relays are connected via a short cable to a printed circuit board; this way the module is of compact size.

Both modules are supplied with power and controlled from the OSP base unit via a single interface connector on the modules printed circuit board; the connection is just via a single connection cable.

Both the R&S OSP-B101L and R&S OSP-B102L module is equipped with an on board memory to store the necessary configuration data of the module.

Port designation:

In comparison to the module R&S OSP-B101 with monostable relays, the R&S OSP-B101L/-B111xL relays ports are labelled with 1 and 2 since after power off the last relay condition is maintained..

Latched type relays and Reset Condition:

As already mentioned above, the last relay condition is maintained after power off. The OPS firmware foresees two possibilities when powering on the R&S OSP. See following overview:

Power On Mode	Effect	Controlled via SCPI
Reset latched type relays	SPDT relay set to position 2 SP6T relay set to open position	CONFigure:POWerup:RESet ”ON”
Keep latched type relay condition	Keep last state	CONFigure:POWerup:RESet ”OFF”

CAUTION

Risk of personal injury due to RF radiation being switched on

If the R&S OSP is used in a system or application that involves amplified RF radiation, switching on the RF power of a generator or amplifier could lead to personal injuries, if human exposure to this radiation is not prevented.
To avoid this risk, make sure that nobody is exposed to RF radiation, as soon as the power is switched on. It is in the responsibility of the user to define the Power Up condition of the modules R&S OSP-B101L and R&S OSP-B102L. Note the instructions given above.

Per default the Power Up condition for the latched relays is set to `POWERUP:RESET "ON"`.

The current setting can be read via SCPI command `CONFigure:POWerup:RESet?`. See chapter 7.4.3 for further information on the CONFigure commands.

5.2.17 I/O and supply Module R&S OSP-B158

The module R&S OSP-B158 is designed as a power supply and control module. It consists of a 16 bit input, a 16 bit differential RS422 output and a power supply connector. All ports are D-Sub connectors, male for input, female for output and power supply.

On the left side of the module, there are four LEDs, labeled *+12 V*, *-12 V*, *+10 V* and *+28 V*. If all LEDs show a green light, the power is OK. If one LED is off, there is a problem with the power supply of the corresponding voltage and probably the maximum current is exceeded (see data sheet). In such a case, please turn off the R&S OSP, disconnect any cable connected to the supply connector and turn the R&S OSP back on and check the LED again.

The LED labeled EXT shows a green light, if a 3.3 V voltage is supplied at the input connector pin 17 (AUX-IN), see chapter 3.3.9.

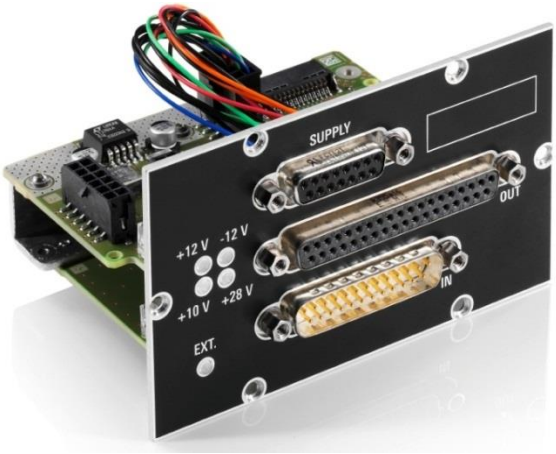

Figure 5-47: Module R&S OSP-B158

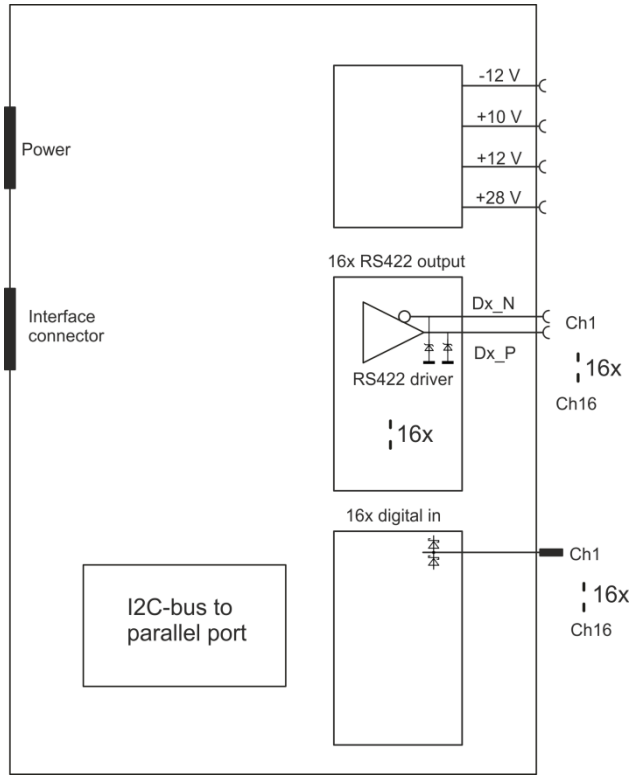

Figure 5-48: Block Diagram Module R&S OSP-B158

When the module R&S OSP-B158 is configured within the R&S OSP, a manual operation of the module can be performed via the OSP Panel. See chapter 3.3.9 for details.
For remote control operation see chapters 6 and 7.

See chapter 9.2.23 for details on the connector pin assignments.

5.2.18 RF Switch Module R&S OSP-B142

The module R&S OSP-B142 is designed as a universal RF switch modules using solid state relay types. Depending on the variant it consists of one, two or three SPDT switches or of three DP3T switches. All switches can be operated independently from each other.

The solid state relay allows handling of up to 40 dBm in a frequency range up to 8 GHz.

The relay is a solid state type; i.e. an RF connection is provided from the terminal C (Common) to the position P2 only with power switched on. When the relay is activated, the terminal C is connected to position P1.

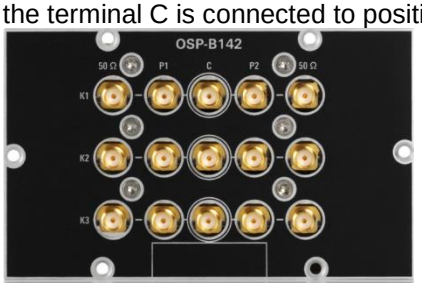

Figure 5-49: Module R&S OSP-B142 (variant .03 with 3 DP3T switches)

The relays are mounted directly in the module front panel. All the RF connectors are SMA female types. All relays are plugged into a kind of backplane; this way the module is of compact size and no cabling to the relays is required.

The R&S OSP-B142 module is supplied with power and controlled from the R&S OSP base unit via a single interface connector on the module's printed circuit board; the connection is done via a single connection cable.

The R&S OSP-B142 module is equipped with on-board memory to store the configuration data of the module.

The R&S OSP-B142 exists in four different variants:

Variant	Relay configuration
OSP-B142 V03	3 x DP3T relay, sold state, w/o external termination
OSP-B142 V11	1 x SPDT relay, sold state, with external termination
OSP-B142 V12	2 x SPDT relay, sold state, with external termination
OSP-B142 V13	3 x SPDT relay, sold state, with external termination

The sketch below shows the details of each DP3T relay. Each of the three DP3T relays is built-up by three individual solid state switches.

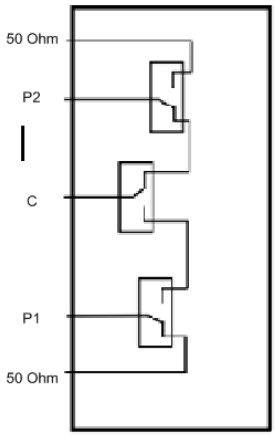

5.2.19 RF Switch Module R&S OSP-B149H

The module R&S OSP-B149H is designed as a universal RF switch modules using a terminated solid state SP8T relay. It allows handling up to 20 dBm in a frequency range from 100 MHz up to 40 GHz.

The relay is a solid state type, hence, only with power switched on, an RF connection is provided from the terminal RF COM (Common) to any of the numbered ports RF1 to RF8. Each of these ports has its own indicator LED.

When the relay is not activated (no control voltage applied) and after a reset, the relay automatically falls back to its stable default state. In this state, RF COM is not connected to any of the numbered ports. All LEDs are off.

When the relay is activated (control voltage applied), the port RF COM is connected to the port that is coded in the control signal. The associated LED is on.

Figure 5-50: Module R&S OSP-B149H

The relay is mounted directly in the module's panel. All the RF connectors are PC 2.92 mm female types. The relay is plugged into a backplane; this way the module is of compact size and no cabling to the relays is required.

The R&S OSP-B149H module is supplied with power and controlled from the R&S OSP base unit via a single interface connector on the module's printed board; the connection is done via a single interface cable.

The R&S OSP-B149H module is equipped with on-board memory to store the configuration data of the module. The sketch below shows the details of the relay.

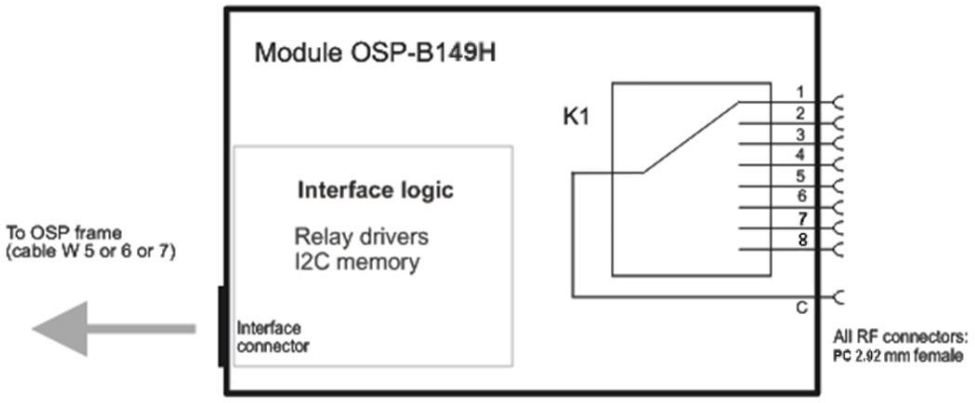

5.3 Graphical User Interface

The R&S OSP130 can operate in local mode by means of its integrated operating elements and display screen. This chapter gives details for the operation of the instrument using the graphical user interface (GUI).

The same graphical user interface is available also for the R&S OSP120 when connected to a computer via LAN, and running some browser on this computer.

The following sections can help you to make efficient use of the OSP GUI of the R&S OSP. For additional information on using the OSP Panel see chapter 3.3.

5.3.1 Starting the R&S OSP120

Connect monitor and mouse / keyboard to the R&S OSP120 instrument. After power-on, the instrument is in ready state after about 30 seconds. The graphical user interface is available when the R&S OSP120 is connected to a computer via LAN, and running some browser (Internet Explorer or Mozilla Firefox for example) on this computer. Type the following as URL:
http://192.168.48.147/vnc (example with R&S OSP default IP address, see chapter 2.9 for more information on IP address).

In the following dialog you are prompted for a password. Type instruments as password.

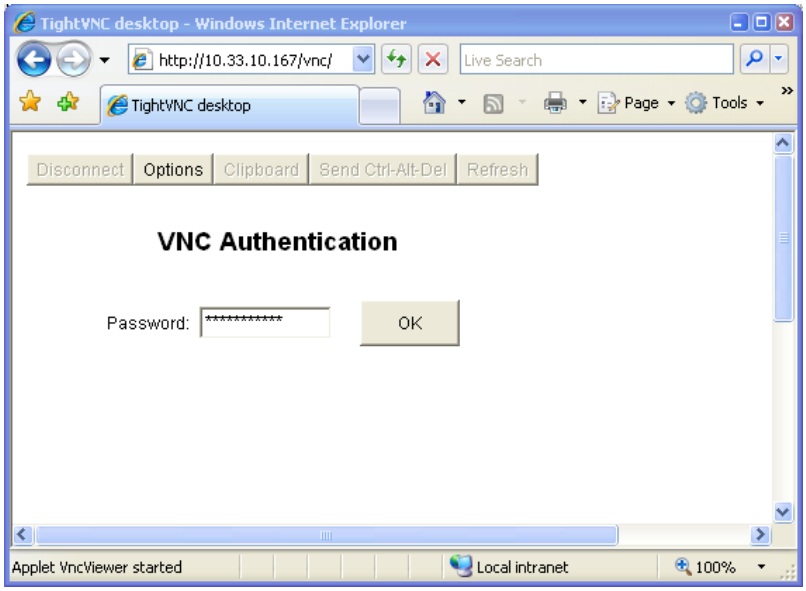

When finished the start screen displays some information on the equipment, as described in the following section.

The following keystrokes on the external keyboard correspond to the keys on the front panel of the R&S OSP130:

	key on R&S OSP130 front panel	corresponding keyboard key
	MENU Top level menu	CTRL + M
	BACK up in hierarchy by one menu level	ESC
	HOME Start screen	CTRL + H
	cursor keys	cursor keys or mouse
	FUNCTION switching action, if applicable.	CTRL + F
	OK confirms a selection	Enter, or mouse click
	STATUS status information or changes selection of a switch for path configuration.	CTRL + S

5.3.1.1 Starting the R&S OSP120 GUI without password

For some applications it can be reasonable to start the R&S OSP120 GUI without password, for example if you use the R&S OSP120 within a system that does already feature password protection. Starting the GUI without password is accomplished by a few steps to be entered via the Linux console.

NOTICE

If you disable the vnc password for the R&S OSP, the network access control is in your own responsibitity.

Once the vnc password is disabled, the instrument remains in this state, until the usage of a vnc password is explicitely enabled again.

Disabling the password:

1. Switch on the R&S OSP. The actual IP address must be known.
2. Start an application program (like PuTTY or similar) and connect your PC to the R&S OSP. When asked for the login, use the login name root and the password root.
3. Type in the following commands:
   cp /etc/inetd.conf /etc/inetd.conf.ori

   sed -i 's/vnc.*/vnc stream tcp nowait root \/usr\/bin\/x11vnc x11vnc -display :0 -inetd -q -speeds dsl/' /etc/inetd.conf

   reboot

This is shown in the following dialog:

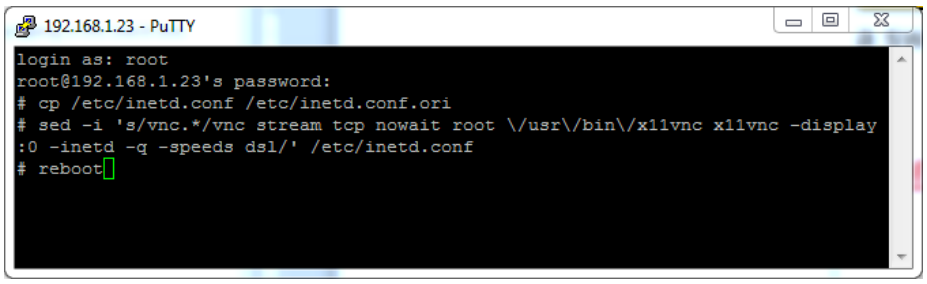

With the password disabled, the R&S OSP GUI is started **without any VNC authentication.**

Enabling the password again:

1. Switch on the R&S OSP. The actual IP address must be known.
2. Start an application program (like PuTTY or similar) and connect your PC to the R&S OSP. When asked for the login, use the login name root and the password root.
3. Type in the following commands:
   cp -f /etc/inetd.conf.ori /etc/inetd.conf

reboot

This is shown in the following dialog:

With the password enabled, the R&S OSP GUI is started **with VNC authentication.**

For the password, see chapter 5.3.1.

NOTICE

In order to type in the correct commands, we recommend to copy and paste the commands high-lighted in green fields above.

For copying (Windows OS) use CTRL+C, for pasting (using PuTTY) use the right mouse key.

5.3.2 Starting the R&S OSP130

After power-on, the R&S OSP130 instrument is in ready state after about 30 seconds.

If the OSP is connected to a LAN network, the IP address is displayed after booting:

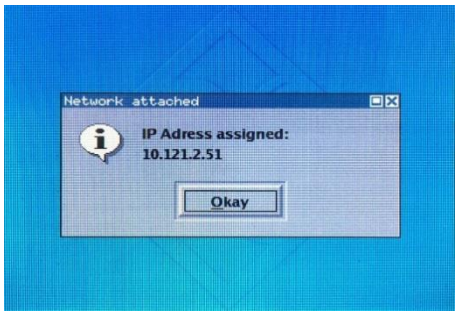

The display shown above disappears after some seconds and the start screen is displayed with basic information on the equipment:

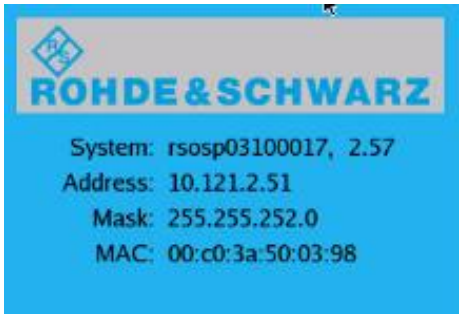

or

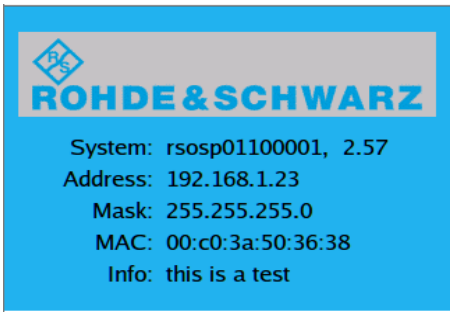

The System field returns the string **rsospvvnnnnnn, x.xx** where **vv** is the two-digit type identifier (e.g. “03” for R&S OSP130), **nnnnnn** the serial number of the instrument and **x.xx** is the software version.

The Address field indicates the IP address (see chapter 2.9).
The Mask field shows the subnet mask string.
With MAC the instrument’s MAC address is shown.
For the Info field (if activated), see chapter 3.7.

To go to the top level menu (Main menu), press any of the keys MENU, RESET or OK while the start screen is displayed.

5.3.2.1 GUI Information Line on R&S OSP130

With firmware version 2.57 onwards, an additional information line can be set up at the R&S OSP130. It either displays any custom text or the actual path set. For configuring the GUI info line, see chapter 3.7.1.

5.3.3 General Navigation Operations

The instruction in this section describe how to access the various menu levels, the modules of the instrument, and some general pieces of information.

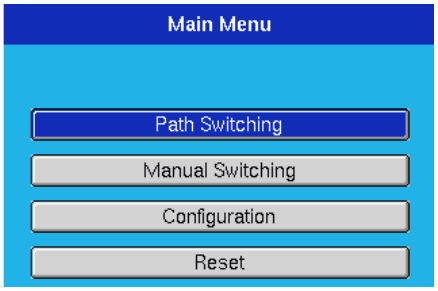

With the cursor keys, the appropriate menu function can be selected.

Selecting Manual Switching and pressing OK will display a screen as follows:

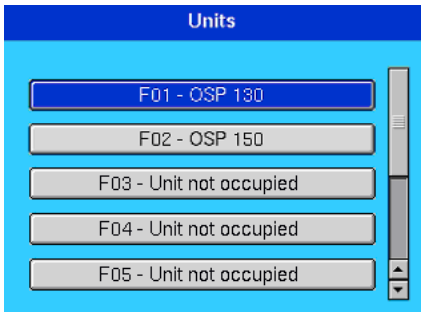

The example here shows an R&S OSP130 connected with a single extension unit R&S OSP150.

If an extension unit R&S OSP150 is located on F02 to F09, it can be selected from this dialog.

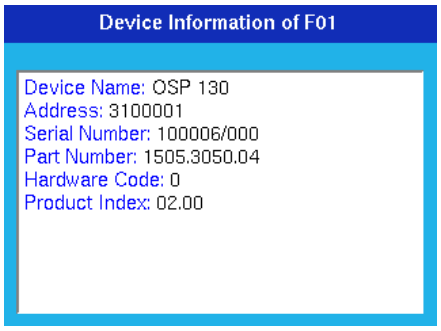

While the selection to one of the units is made, pressing the STATUS key will display some information on the unit. See the example.

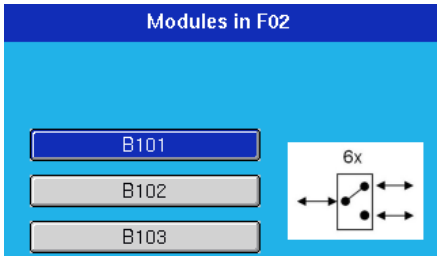

Selecting the unit and pressing OK will move into the next dialog.

Depending on the modules fitted to the unit, the available selections will vary. In the example on the left hand side the first slot is equipped with an R&S OSP-B101, the second with an R&S OSP-B102, and the third with an R&S OSP-B103. Next to the selected module some picture visualizes the capability of the module, in the case of the R&S OSP-B101 indicated by a SPDT switch and the count 6x.

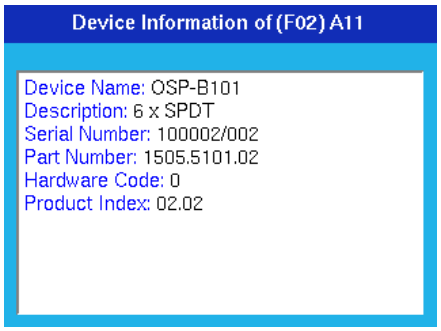

While the selection to one of the modules is made, pressing the STATUS key will display some information on the module. See the example.
For completeness, see more examples of module information.

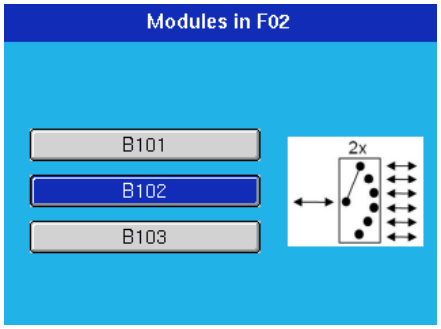

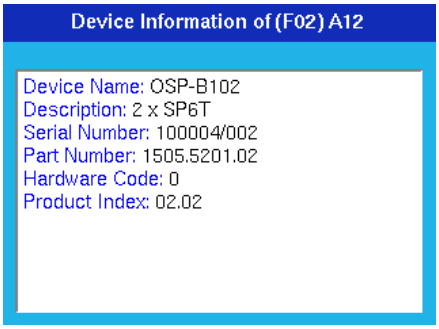

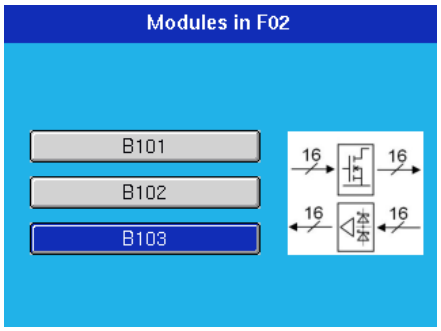

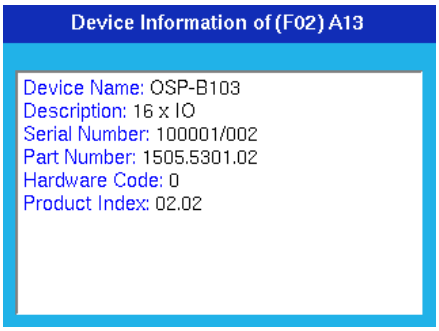

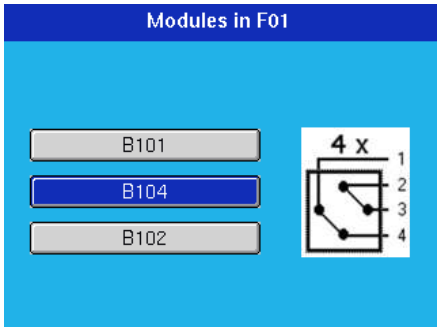

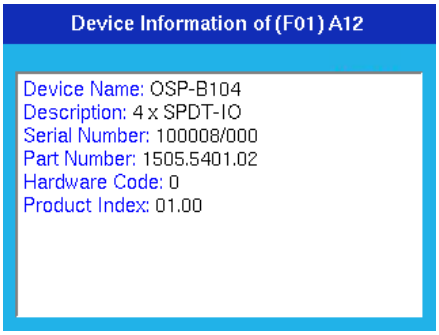

BACK From any menu level, this key will bring you one level up in hierarchy.

MENU From any menu level, this key will bring you directly to the Main menu.

5.3.4 Using the R&S OSP-B101/-B106/-B107/-B111

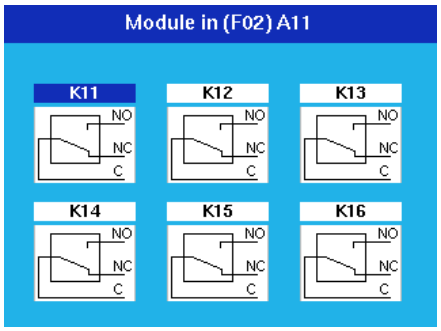

After selection of the R&S OSP-B101 module this dialog is opened.

With the cursor keys one of the six relays can be chosen, indicated by the blue color in the relay name.

Pressing the FUNCTION key toggles the relay from NC to NO and vice versa. The display of the switch in the dialog is changed accordingly.

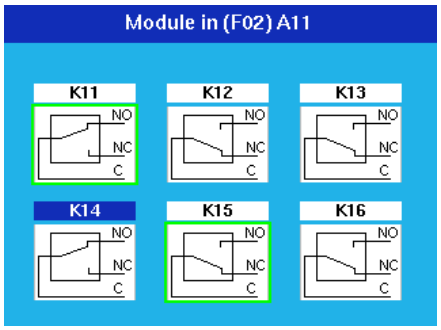

Pressing the key STATUS toggles the selection of the relay.

A selected relay (K11 and K15 in this example) is displayed with a green surrounding. All selected relays are taken over into a path configuration.

A non selected relay is not considered when defining a path configuration.

The operation as described above applies to further options of the R&S OSP as far as the option has got a similar relay configuration. It will apply to the following modules:

Option	Relay configuration
R&S OSP-B106	3 x SPDT relay with N connectors, 12 GHz, 3 x SPDT relays with BNC connectors, 900 MHz / 2 A
R&S OSP-B107	6 x SPDT relay, solid state, 6 GHz
R&S OSP-B111	6 x SPDT relay, 40 GHz

Please note that for the module R&S OSP-B106 the relays are numbered from K1 to K6 but from K11 to K16 for all other modules.

5.3.5 Using the R&S OSP-B102/-B112

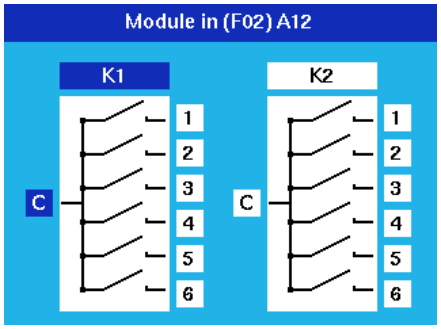

After selection of the R&S OSP-B102 module this dialog is opened.

With the cursor left/right keys you can chose either relay, and with the cursor up/down keys any terminal of that relay, indicated by the blue color. In the example this is terminal 1 of relay K1.

Pressing the FUNCTION key closes the chosen relay position. With the Common terminal chosen (“C” displayed in blue) the relay is opened. The display of the switch in the dialog is changed accordingly.

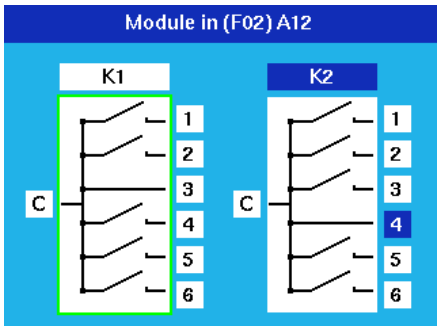

Pressing the key STATUS toggles the selection of the relay.

A selected relay (K1 in this example) is displayed with a green surrounding. All selected relays are taken over into a path configuration.

A non selected relay is not considered when defining a path configuration.

The operation as described above applies to further options of the R&S OSP as far as the option has got the same relay configuration. It will apply to the following modules:

Option	Relay configuration
R&S OSP-B112	2 x SP6T relay, 40 GHz
R&S OSP-B108	K1 = K11, DC MUX

5.3.6 Using the R&S OSP-B103

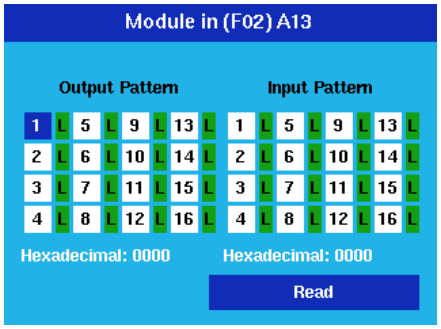

After selection of the R&S OSP-B103 module this dialog is opened.

With the cursor keys any of the 16 output channels can be chosen, indicated by the blue color. In the example this is channel 1.

Pressing the FUNCTION key toggles this channel from low (L, dark green) to high (H, red) and vice versa. The display of the channel in the dialog is changed accordingly.

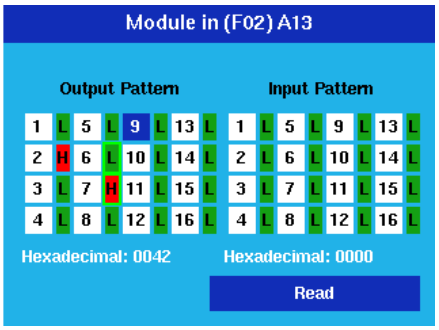

Pressing the key STATUS toggles the selection of the channel.

A selected channel (channels 6 and 7 in this example) is displayed with a green surrounding. All selected channels are taken over into a path configuration.

A non selected channel is not considered when defining a path configuration.

In addition to the single channel information a total of all 16 channels is shown as hexadecimal value. Channel 1 corresponds to the lowest bit, having the value 1, whereas channel 16 is the highest bit, having the value 8000.

Pressing the key OK will execute a read command reading the status of all input channels. They will be displayed in dark green for low values (L) and in red for high values (H).

In addition to the single channel information a total of all 16 channels is shown as hexadecimal value. Channel 1 corresponds to the lowest bit, having the value 1, whereas channel 16 is the highest bit, having the value 8000.

5.3.7 Using the R&S OSP-B104

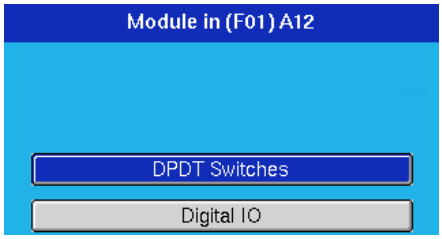

After selection of the R&S OSP-B104 module this dialog is opened. With the cursor key either option can be selected and activated by pressing the key OK.

5.3.7.1 Setting the Transfer Relays and Reading the Interlock

In the DPDT Switches case, the following dialog opens.

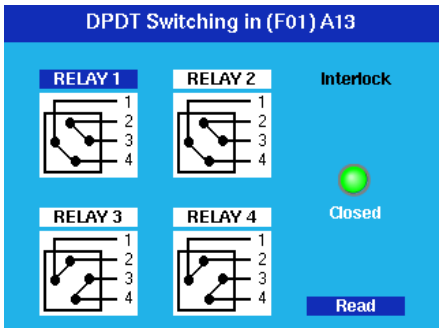

With the cursor keys any of the 4 transfer relays can be chosen, indicated by the blue color. In the example this is RELAY 1.

Pressing the FUNCTION key toggles this relay into the opposite position, indicated by the lines between the connectors. In one position the connections are made between connectors 1 and 2 and between 3 and 4. In the other position the connections are made between connectors 1 and 4 and between 2 and 3.

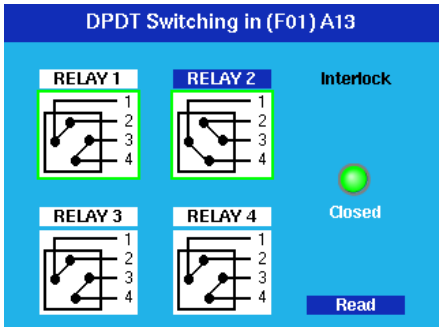

Pressing the key STATUS toggles the selection of the relay.

A selected relay (RELAY 1 and RELAY 2 in this example) is displayed with a green surrounding. All selected relays are taken over into a path configuration.

A non selected relay is not considered when defining a path configuration.

Pressing the key OK will execute a read command. The status of the interlock, i.e. if there is a connection between pins 7 and 15 of the IN / OUT connector, is indicated. A green signal shows a closed interlock, a red signal an open interlock. If the interlock is closed, a relay also closes a contact between pins 8 and 14 of the IN / OUT connector.

5.3.7.2 Input and Output Pattern

When the Digital I/O had been chosen, the following dialog is shown.

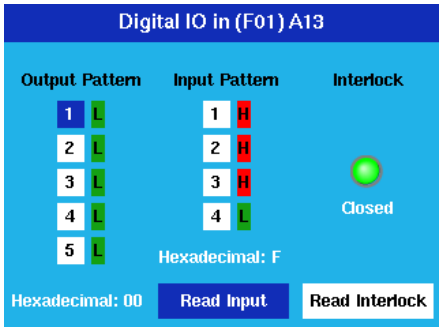

With the cursor up / down keys any of the 5 output channels can be chosen, indicated by the blue color. In the example this is channel 1.

Pressing the FUNCTION key toggles this channel from low (L, dark green) to high (H, red) and vice versa. The display of the channel in the dialog is changed accordingly.

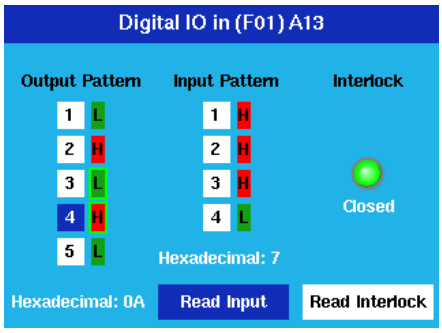

Pressing the key STATUS toggles the selection of the channel.

A selected channel (channels 3 and 4 in this example) is displayed with a green surrounding. All selected channels are taken over into a path configuration.

A non selected channel is not considered when defining a path configuration.

With the cursor left / right key either Read Input or Read Interlock can be selected, indicated in blue. Pressing the key OK will execute a read command.

In the case of Read Input the status of all input channels is read. They will be displayed in dark green for low values (L) and in red for high values (H). The case of Read Interlock reads the interlock status, see chapter 5.3.7.1.

5.3.8 Using the R&S OSP-B121

After selection of the R&S OSP-B121 module this dialog is opened.

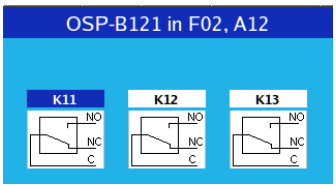

With the cursor keys one of the three relays can be chosen, indicated by the blue color in the relay name.

Pressing the FUNCTION key toggles the relay from NC to NO and vice versa. The display of the switch in the dialog is changed accordingly.

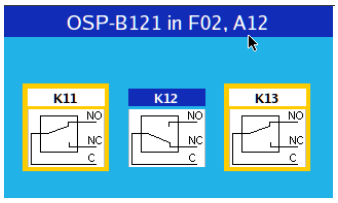

Pressing the key STATUS toggles the selection of the relay.

A selected relay (K11 and K13 in this example) is displayed with a green surrounding. All selected relays are taken over into a path configuration.
A non selected relay is not considered when defining a path configuration.

5.3.9 Using the R&S OSP-B122 and OSP-B133

After selection of the R&S OSP-B122, R&S OSP-B122H or R&S OSP-B133 module, the following dialog is opened.

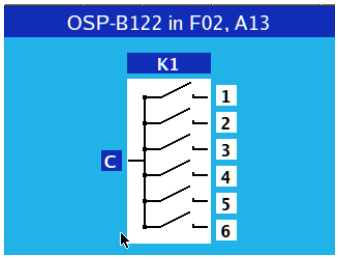

With the cursor up/down keys you can chose any terminal of that relay, indicated by the blue color. In the above example the common terminal C is selected; all six terminals are open.

Pressing the FUNCTION key closes the chosen relay position. With the Common terminal chosen (“C” displayed in blue) the relay is opened. The display of the switch in the dialog is changed accordingly.

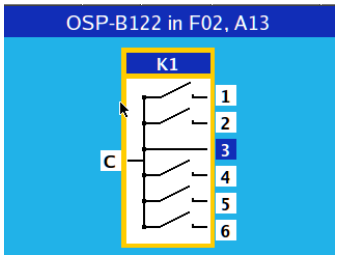

Pressing the key STATUS toggles the selection of the relay.

A selected relay (K1 in this example) is displayed with a green surrounding. All selected relays are taken over into a path configuration.
A non selected relay is not considered when defining a path configuration.

5.3.10 Using the R&S OSP-B123 to R&S OSP-B126 and R&S OSP-B129

The modules R&S OSP-B123, R&S OSP-B124, R&S OSP-B125, R&S OSP-B125E, R&S OSP-B125H and R&S OSP-B126 combine different numbers of SPDT and SP6T as they are used in the R&S OSP-B121 and R&S OSP-B122 module, respectively.

The module R&S OSP-B129 houses one terminated SP8T and two SPDT switches.

The following example is given for the module R&S OSP-B125. After selection of the this module the following dialog is opened. This dialog shows all the available relays of the module.

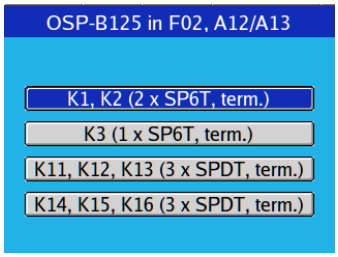

Selecting the first group of relays, a dialog is opened for relay selection and switching.

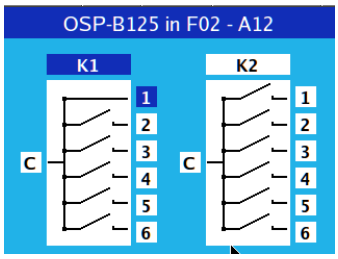

The operation is as usual. With the cursor left/right keys you can chose either relay, and with the cursor up/down keys any terminal of that relay, indicated by the blue color. In the example this is terminal 1 of relay K1.

Pressing the FUNCTION key closes the chosen relay position. With the Common terminal chosen (“C” displayed in blue) the relay is opened. The display of the switch in the dialog is changed accordingly.

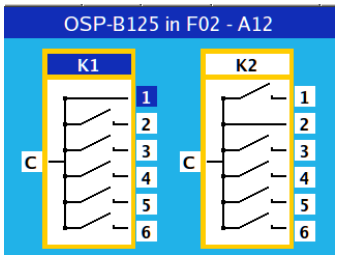

Pressing the key STATUS toggles the selection of the relay.

A selected relay (K1 and K2 in this example) is displayed with a green surrounding. All selected relays are taken over into a path configuration.
A non selected relay is not considered when defining a path configuration.
The operation as described above applies to the following options of the R&S OSP with similar relay configuration.

Option	Relay configuration
R&S OSP-B123	6 x SPDT relay, 18 GHz, terminated 1 x SP6T relay, 18 GHz, terminated
R&S OSP-B124	3 x SPDT relay, 18 GHz, terminated 3 x SP6T relay, 18 GHz, terminated
R&S OSP-B125	6 x SPDT relay, 18 GHz, terminated 3 x SP6T relay, 18 GHz, terminated
R&S OSP-B125E	6 x SPDT relay, 26 GHz, terminated 3 x SP6T relay, 26 GHz, terminated
R&S OSP-B125H	6 x SPDT relay, 40 GHz, external terminated 3 x SP6T relay, 40 GHz, terminated
R&S OSP-B126	3 x SP6T relay, 18 GHz, terminated
R&S OSP-B129	1 x SP8T relay, 18 GHz, terminated 2 x SPDT relay, 18 GHz

Please note that for the modules R&S OSP-B121 to R&S OSP-B126 and R&S OSP-B129 all relay types SPDT are counted starting with K11 whereas the SP6T types are counted from K1 onwards.

5.3.11 Using the R&S OSP-B149H

The module R&S OSP-B149H features a solid-state SP8T switch. After selection of this module, the following dialog is opened for selection and switching of relay K1:

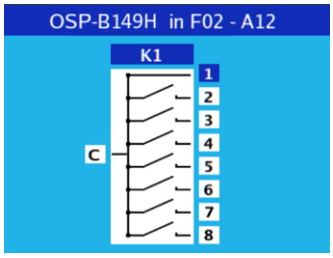

Select any terminal of the relay with the cursor up/down keys. The selected terminal is highlighted in dark blue color. In the example this is terminal 1.

Pressing the FUNCTION key closes the chosen relay position. With the Common terminal chosen (“C” displayed in blue), this action opens the relay. The display of the switch in the dialog is changed accordingly.

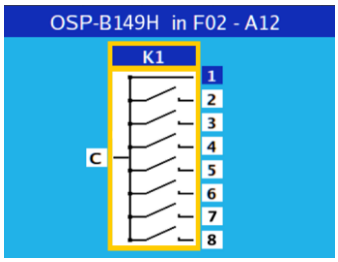

Pressing the key STATUS toggles the selection of the relay.

The selected relay (K1 in this example) is displayed with an orange surrounding. A selected relay is taken over into a path configuration, while a non-selected relay is not considered when defining a path configuration.

5.3.12 Path Configuration

A very comfortable way to define the different switching paths required in a test setup or in a system is the R&S OSP feature “path configuration”. With suitable dialogs it is easy to combine several relay positions of different R&S OSP modules in one path information. If path switching is required, only the path configuration is called by its name and the switching is performed more or less by a single command.
See also chapter 3.4 for another approach to path configurations using OSP Panel.

In this chapter the functions related to path configurations are described based on some example. Refer to the previous chapters for selecting switch positions or output channel values.

Choosing a default selection

To obtain the correct switching for a new path configuration, it is recommended to start with a well-defined default selection. There are two possibilities described in the following paragraph.

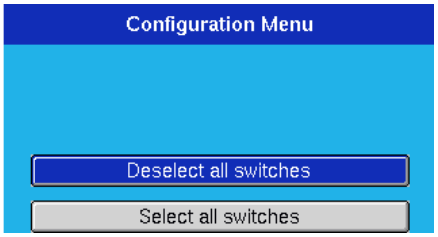

Go from the Main menu to the Configuration menu.
If the number of switches to be included in a path is rather small, it is recommended to deselect all switches. This is done by choosing “Deselect all switches”.

If the number of switches is rather large, chose “Select all switches” instead. Pressing the key OK will perform the related action.

Now go back to the Main menu, and from there select “Manual Switching”. In the following steps define all relay and output channel settings you want to include in the path configuration by using the FUNCTION key. Don’t forget to select these relays and channels using the STATUS key if you have started from a deselected switches configuration, or to deselect the ones not required if you have started from a selected switches configuration.

A path configuration may consist out of several relays located on different R&S OSP modules. Please note that the relay buttons in the corresponding dialogs must be selected for all relays which should be taken over in the path configuration.

Perform the settings of the R&S OSP-B101 module as shown in the second screenshot in chapter 5.3.4. This selects K11 to be in NO and K15 to be in NC position.
Then go back to the Main menu using the MENU key, and select the Path Switching menu.

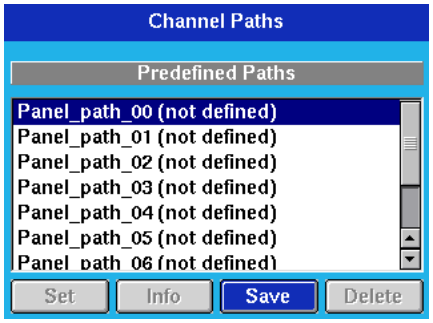

If no path has been saved so far, the list shown in the dialog only contains undefined paths. By default, on an R&S OSP130 there are ten paths which can be defined (Panel_path_00 till Panel_path_01).

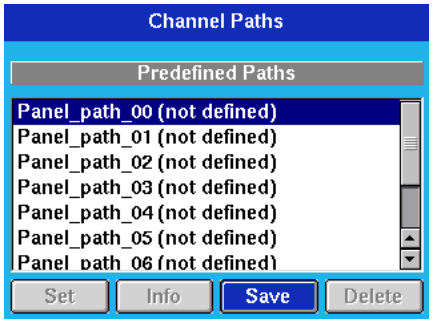

If no path has been saved so far, the list shown in the dialog only contains undefined paths. By default, on an R&S OSP130 there are ten paths which can be defined (Panel_path_00 till Panel_path_01).

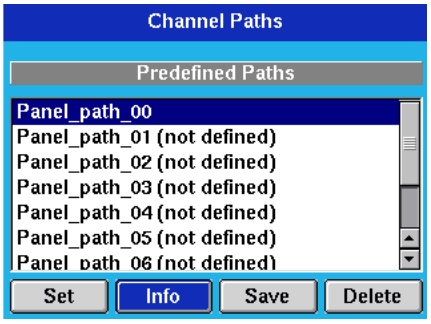

After pressing the OK key (Save being the only possibility when an undefined path is marked) the path configuration is stored as Panel_path_00.

Now mark the Info button using the cursor keys and press OK .

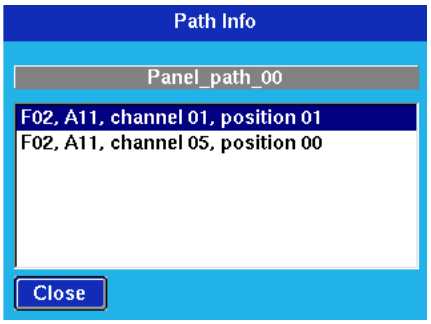

The information displayed thereupon contains the two relays included in the path configuration.
Then go back to Manual switching and select the module R&S OSP-B102.
Perform the settings of the R&S OSP-B102 module as shown in the second screenshot in chapter 5.3.5. This selects K1 to be in position 3.

Go now back to the Main menu using the MENU key, and select the Path Switching menu.

Channel numbers

Note that for some modules there might be an offset to be included either way in order to convert channel numbers to relay names. For example, channel 1 on an R&S OSP-B101 corresponds to K11.

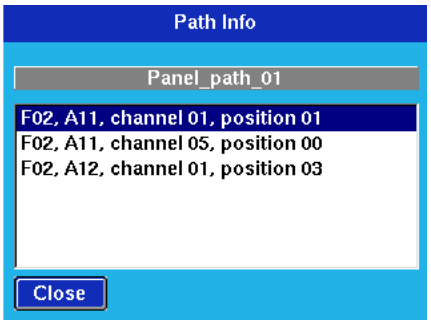

Mark Panel_path_01 with the cursor keys and press OK . This saves the configuration.
Displaying then the related information will lead to the display shown here.
Note that the K1 setting of the R&S OSP-B102 has been added to the previous one

since there was no deselect made for R&S OSP-B101.
Then go back to Manual switching and select the module R&S OSP-B103.
Perform the settings of the R&S OSP-B103 module as shown in the second screenshot in chapter 5.3.6. This selects channel 6 to be low and channel 7 to be high.
Save this configuration in a similar way to Panel_path_02 and display the related information.

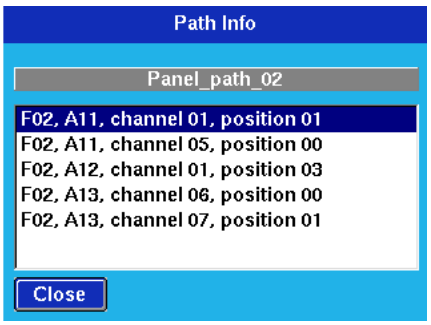

Again, you observe that the new information has been added.
If a new configuration needs to be independent from the previous one, you should use the Configuration menu first in order to deselect or select all switches.
In any case, it is good practice to verify the settings by close inspection of the saved path configuration.
Besides the possibilities for defining a path configuration and to display the information related to this configuration, there are two more actions one can do from the path menu.

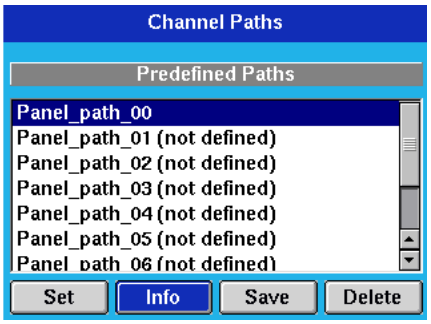

When marking an existing path and choosing the Set button, pressing OK will switch all relays and channels related to this path configuration.
Note that performing the switching will not change which switches are selected. Only the state of the switches of the path configuration will be set as desired.

When marking an existing path and choosing the Delete button, pressing OK will remove this path.

Names of path configurations

As seen in this chapter, the paths which can be chosen for saving path configurations are the fixed ones (Panel_path_01 etc.) provided on the GUI.
Using the OSP Panel, see chapter 3.4, free names can be given to configurations. Within the GUI it is possible to save new configurations onto these names as well, and also the other functions like Info, Delete and Set are available.

5.4 R&S OSP Switch Cycle Counter

The R&S OSP is designed with a switch cycle counter.
Although the mechanical relays used in the R&S OSP modules are selected with respect to high life time, it is recommended to count the switching cycles to have an overview on the instrument use and to replace the relays in time. Please note that the Switch Cycle Counter function is disabled for all solid state relays.

R&S OSP Switch Cycle Counter

The cycle counter is active for all R&S OSP modules with mechanical relays. For R&S OSP modules with solid state relays the switch cycle counter is not activated.

The information on the switching cycles is stored on each of the R&S OSP modules. This way the modules always keep the actual information even when exchanging a module.

R&S OSP Switch Cycle Counter

The cycle counter state is not continuously saved on the flash memory of the R&S OSP modules but only in regular intervals. The switch cycle counter only is foreseen to be read for maintenance and service purpose.

The Switch Cycle Counter State can be read using the OSP Panel application.

Operating the OSP Panel will show a button “Fetch Counters” for all R&S OSP modules where this function is applicable. See the following example for R&S OSP-B101 module:

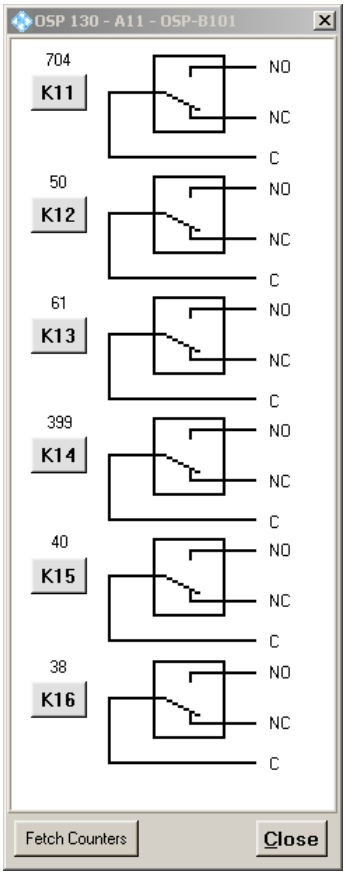

The numbers at each relay label (K11 to K16) show the cycles, the relays already have been switched to NO and NC position, respectively.

Selecting this button will read the actual state of the switch cycle counter.

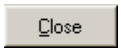

Pressing this button will exit the dialog.

R&S OSP Switch Cycle Counter

Note that the OSP switch cycle counter state is stored on the corresponding switch module on-board memory. To reduce the write operations for the on-board memory, the cycles are stored on the following events:

- each 60 minutes
- every 1000 cycles
- on each “Fetch Counters” command (only if counter state has changed)

5.5 R&S OSP Selftest

The R&S OSP provides a basic selftest procedure on module level. The selftest is primarily intended for production and service purposes; it is not needed during normal operation of the instrument. The following description serves as a general overview.

5.5.1 Selftest via R&S OSP Panel

A selftest can be performed for the R&S OSP via the OSP Panel. See chapter 3 for information on the installation and operation of the OSP Panel application.

The selftest result reflects the current instrument status and checks if all the hardware as shown in OSP Panel module catalog is correctly initialized.

The selftest does not execute special hardware tests.

The selftest is started as follows:

► Select **>Utility >Self Test …** in the OSP Panel.

The selftest is started immediately and with positive result, the following message will appear:

Press OK to exit the Selftest Utility.

5.6 R&S OSP Configuration Check

The R&S OSP and the installed modules all are equipped with on-board memory containing the actual device and module data. These data are primarily intended for production and service purposes.

5.6.1 System Info via R&S OSP Panel

The system information can be read out of the R&S OSP via the OSP Panel. See chapter 3 for information on the installation and operation of the OSP Panel application.

The system info can be read as follows:

► Select **>File >System Info …** in the OSP Panel.

The system information is read from the R&S OSP hardware and the following text file is opened and displayed:

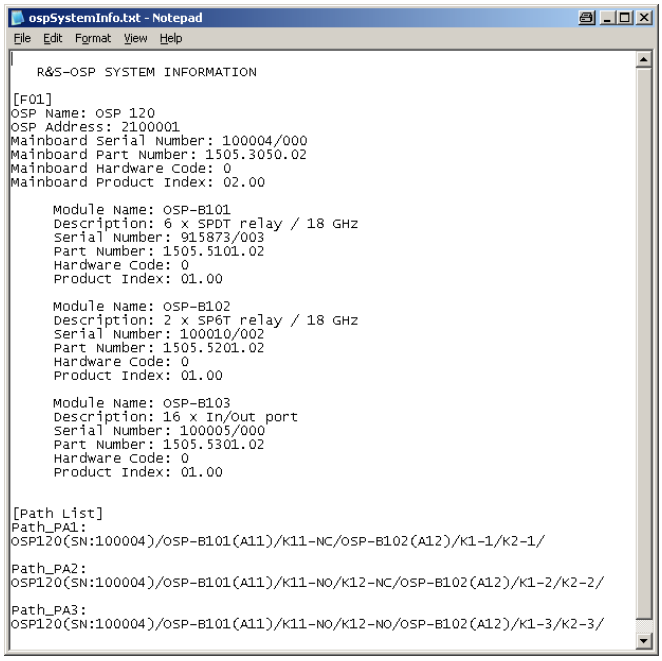

If any paths are defined for the R&S OSP, they are listed under [Path List].
The name of the path is indicated together with the relay setting related to the path.
Close the Notepad to exit the system info utility.

System Info:

The text file containing the System information is stored with the file name ospSystemInfo.txt in the installation directory of the OSP Panel (default directory: C:\OSP Panel).

Each time the system info utility is started at the OSP Panel, this file is overwritten with the actual data.

5.7 SCPI Read/Write

As an additional feature, the OSP Panel allows a direct communication with the R&S OSP via SCPI commands. This additional feature is foreseen for debug purpose and requires to be familiar with SCPI commands of the R&S OSP. Refer to the section on remote control (chapters 6 and 7 of this manual) for further information.

For direct communication with the R&S OSP via LAN interface proceed as follows:

1. Start the OSP Panel.
2. Select **>Utility >Read/Write** … in the OSP Panel.

The following dialog will appear:

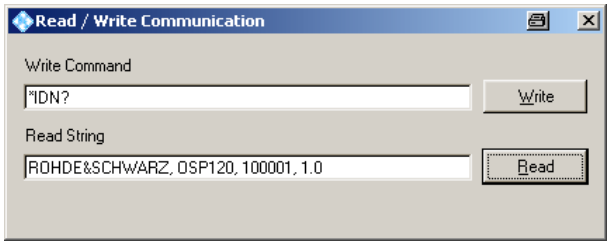

The command to be written to the R&S OSP is entered in the upper text field. The above example sends the identify command to the R&S OSP as soon as the Write button is pressed.

After pressing the Read button, the answer is read from the R&S OSP. In the above example the identification of the R&S OSP is read back and displayed.

Having entered the SCPI command in the text field next to this button, the command is sent to the R&S OSP as soon as this button is pressed.

If the command sent to the R&S OSP is a query command expecting an answer from the R&S OSP, the answer can be read by pressing the READ button.

SCPI Read/Write Commands

This function is not required for operation of the R&S OSP. It is foreseen as additional feature for test and debug purpose. The use of SCPI Read/Write Commands requires knowledge of the R&S OSP remote control commands.

5.7.1 R&S OSP Temperature Read Command

The OSP design with I2C interface and memory on each module has the utility to read the temperature on it's interface.

Read OSP module temperature

Note that this utility makes use of the module interface function. The read-back of the module temperature is just for information and is not specified. This utility may be used for example to examine the temperature conditions of the R&S OSP when the unit is operated inside a rack.

The read the temperature from the R&S OSP modules, the following SCPI command is sent to the R&S OSP: diag:service:sfun? F01,"temp2 0"

F01 is the R&S OSP frame 1 and temp2 the command to read the temperature.

The last digit in the above string has the following meaning:

0 = OSP Mainboard

1 = OSP Module interface 1

2 = OSP Module interface 2

3 = OSP Module interface 3

The SCPI command can be sent via the application OSP Panel, >Utility >Read/Write as shown in the below example.

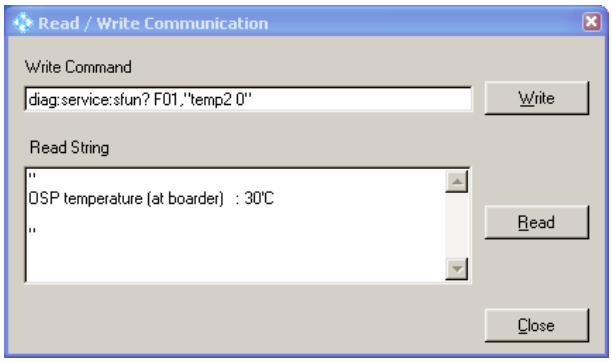

Note that for the above function the corresponding module must be configured in the R&S OSP; if the module interface in not available, an error message will appear.

6 Remote Control

This chapter provides instructions on how to set up the R&S OSP for remote control, a general introduction to remote control of programmable instruments, and the description of the remote control concept. For reference information about all remote control commands implemented by the instrument, complemented by comprehensive programming examples, refer to chapter 7.

6.1 Remote Control Operation

The instrument provides a LAN remote control interface. The following table shows details.

Table 6-1: Remote control interface and protocols

Interface	Protocols, VISA*) resource string	Remarks
Local Area Network (LAN)	VXI-11 protocol TCPIP[board]::host address[::LAN device name][::INSTR]	The LAN REMOTE connector is located on the rear panel. For a description of the protocol and the interface commands refer to VXI-11 Protocol.
	VISA socket resource TCPIP[board]::host address::Data Port[::SOCKET]	Refer to your VISA user documentation.

*) VISA is a standardized software interface library providing input and output functions to communicate with instruments. The I/O channel (LAN or TCP/IP, USB, GPIB, ...) is selected at initialization time by means of the channel–specific resource string (also termed address string) quoted above or by an appropriately defined VISA alias (short name). A VISA installation is a prerequisite for remote control over LAN or USB interface. For more information about VISA refer to the user documentation.

LAN Connection

The R&S OSP provides a LAN connector for direct connection to a Local Area Network. Remote control via LAN requires a VISA installation but no additional hardware at the controller. VISA provides the TCP/IP interface type and several protocol types to communicate with LAN-connected devices. For a simple example see Establishing and Testing a LAN Connection

SCPI (Standard Commands for Programmable Instruments) commands – instrument-control commands – are used for remote control.

SCPI Compatibility

The SCPI standard (Standard Commands for Programmable Instruments) is based on standard IEEE 488.2 and aims at the standardization of device-specific commands, error handling and the status registers. The R&S OSP is compatible to the SCPI version 1999.0.

SCPI-confirmed commands are explicitly marked in the command reference chapters.

Commands without SCPI label are device-specific, however, their syntax follows SCPI rules. The tutorial "Automatic Measurement Control – A tutorial on SCPI and IEEE 488.2" from John M. Pieper (R&S order number 0002.3536.00) offers detailed information on concepts and definitions of SCPI.

The requirements that the SCPI standard places on command syntax, error handling and configuration of the status registers are explained in detail in the following sections. Tables provide a fast overview of the bit assignment in the status registers. The tables are supplemented by a comprehensive description of the status registers.

Manual and remote control

Remote control programs should always start from a well-defined initial state (e.g. with the command *RST) and then implement the required settings in order to keep full control over the instrument.

6.1.1 Establishing and Testing a LAN Connection

In the following example, a LAN connection is set up to the R&S OSP. The connection is tested using a simple test script.

The steps in detail depend on the test environment in use. The present example is based on a test tool which requires an additional VISA installation.

1. Connect your R&S OSP to the controller or to the home/company network using the LAN REMOTE connector at the rear panel.
2. If you are using an R&S OSP120 (which has no display) a standard monitor must be connected to the DVI-D connector on the front panel.
3. Switch on the R&S OSP, wait until the startup procedure has completed. If the local area network supports DHCP, the IP address that will be assigned to the R&S OSP is show on the instrument display or on the monitor. If DHCP is not supported, the R&S OSP can always be addressed via static IP address **192.168.48.147**. In the following, we assume that the instrument has the IP address 10.123.10.173.
4. Start your test tool, define the VISA address string and assign an alias. In the following example, the VISA address string "TPCIP0::10.123.10.173::inst0::INSTR" is defined; see table in chapter 6.1. The VISA alias (short string) is "OSP". Note that the part "::inst0" of the VISA string is optional.
5. Write a test script using the VISA alias and run the script.

The following test script queries the identification string of the connected R&S OSP and (after a short pause) returns the contents of the error queue:

```
OSP: *IDN?
PAUSE 100
OSP: system:error?
```

On test script execution, the test tool generates the following result log:

```
: Opening new VISA channel: TCPIP0::10.123.10.173::inst0::INSTR
: [-->TCPIP0::10.123.10.173::inst0::INSTR] Setting timeout to 5000 ms
: Connection to TCPIP0::10.123.10.173::inst0::INSTR established!
: Session handle: 0
: VISA Resource-Identifier: TCPIP0::10.123.10.173::inst0::INSTR
: send_Query(0, "*IDN?")
: [-->TCPIP0::10.123.10.173::inst0::INSTR] *IDN?
: read_Answer(0, ..., False)
: [<--TCPIP0::10.123.10.173::inst0::INSTR]
Rohde&Schwarz,OSP130,100001,1.0
: send_Query(0, "system:error?")
: [-->TCPIP0::10.123.10.173::inst0::INSTR] system:error?
: read_Answer(0, ..., False)
: [<--TCPIP0::10.123.10.173::inst0::INSTR] 0,"No error"
```

6.1.2 Switchover to Remote Control

On power-up, the instrument is always in the manual operating state and can be operated via the front panel controls (for instruments equipped with a display – R&S OSP130), a connected keyboard or via the Graphical User Interface (GUI) displayed on an external monitor. The instrument is switched to remote control as soon as it receives a command from the controller.

6.1.3 Return to Manual Operation

Return to manual operation can be initiated via the front panel or via remote control.

- Manually: Click a front panel key, and select the desired action.
- Via VXI-11 protocol: &GTL interface message

6.2 Messages

The messages transferred between the controller and the R&S OSP can be either interface messages or Device Messages (Commands and Device Responses).

Chapter 6.2.3, SCPI Command Structure and Syntax, describes the structure of the device messages as defined by the SCPI standard.

6.2.1 VXI-11 Interface Messages

The VXI-11 protocol allows the instrument to be controlled in a Local Area Network. For a short introduction and a list of interface functions refer to the VXI-11 Protocol Specification document.

6.2.2 Device Messages (Commands and Device Responses)

Device messages are transferred via the LAN interface (VXI-11 protocol). The ASCII character set is used. A distinction is made according to the direction in which device messages are transferred:

Commands
are messages the controller sends to the instrument. They operate the device functions and request information.

Device responses
are messages the instrument sends to the controller after a query. They can contain measurement results, instrument settings and information on the instrument status.

Commands are subdivided according to two criteria:

1. According to the effect they have on the instrument:

- **Setting commands**
  cause instrument settings such as a reset of the instrument or setting delay times to some value.
- **Queries**
  cause data to be provided for output on LAN, e.g. for identification of the device or for querying I/O channel input conditions.

2. According to their definition in standard IEEE 488.2:

- **Common commands**
  have a function and syntax that is exactly defined in standard IEEE 488.2. Typical tasks are the management of the standardized status registers, reset and selftest.
- **Instrument-control commands**
  are functions that depend on the features of the instrument. A majority of these commands has also been standardized by the SCPI consortium.

The device messages have a characteristic structure and syntax. In the Remote Command Reference chapter all commands are listed and explained in detail.

6.2.3 SCPI Command Structure and Syntax

SCPI commands consist of a so-called header and, in most cases, one or more parameters. The header and the parameters are separated by a "white space" (ASCII code 0 to 9, 11 to 32 decimal, e.g. blank). The headers may consist of several mnemonics which are separated by colons. Queries are formed by appending a question mark to the header.

SCPI defines two command types with different syntax:

- Common commands
- Instrument-Control Commands

6.2.3.1 Common Commands

Common (=device-independent) commands consist of a header preceded by an asterisk "*" and possibly one or more parameters.

Examples:

*RST	RESET, resets the instrument.
*ESE 253	Sets EVENT STATUS ENABLE register to 253
*IDN?	IDENTIFICATION QUERY, queries the instrument identification string.

6.2.3.2 Instrument-Control Commands

Instrument-control commands are based on a hierarchical structure and can be represented in a command tree. The command headers are built with one or several mnemonics (keywords). The first level (root level) mnemonic identifies a complete command system.

Example:
`ROUTe...` This mnemonic identifies the ROUTe command system which provides ‘signal routing’ capabilities.

For commands of lower levels, the complete path must be specified, starting on the left with the highest level, the individual keywords being separated by a colon ":".

Example:
`ROUTe:PATH:DELete:ALL`

This command is located on the fourth level of the ROUTe system. It deletes previously define path configurations. The following rules simplify and abbreviate the command synta x:

Optional mnemonics

Commands may contain optional mnemonics. These mnemonics are marked by square brackets in the command description. The full command length must be recognized by the instrument for reasons of compatibility with the SCPI standard. Some commands are considerably shortened by omitting optional mnemonics.

Long and short form

The key words have a long form and a short form. Either the short form or the long form can be entered; other abbreviations are generally not permitted.

Example:
`ROUT:MOD:CAT?`
`ROUTe:MODule:CATalog?`

Case insensitivity

The short form is marked by upper case letters, the long form corresponds to the complete word. Upper case and lower case notation only serves to distinguish the two forms in the manual, the instrument itself is case-insensitive.

Parameters

Parameters must be separated from the header by a "white space". If several parameters are specified in a command, they are separated by a comma ",". For a description of the parameter types, refer to chapter 6.2.3.5, SCPI Parameters.

Example:
`ROUTe:MODule:DEFine F01,3100001`

This command assigns an R&S OSP instrument represented by the address 3100001 to a instrument name. With this name the instrument can be addressed in subsequent commands.

6.2.3.3 Structure of a Command Line

A command line may consist of one or several commands. It is terminated by a <New Line>, a <New Line> with EOI or an EOI together with the last data byte. Some programming languages automatically produce an EOI together with the last data byte.

Several commands in a command line must be separated by a semicolon ";". If the next command belongs to a different command system, the semicolon is followed by a colon.

Example:

`ROUT:PATH:DEF "path1",(@F01(0104));:MMEM:STOR:STAT 0,"pathfile"`

This command line contains two commands. The first command belongs to the ROUTe system and defines a path name which it stored in the instrument's internal memory. The second command belongs to the MMEMory system and stores all actually defined path names durable on the compact flash of the instrument.

If the successive commands belong to the same system, having one or several levels in common, the command line can be abbreviated. To this end, the second command after the semicolon starts with the level that lies below the common levels. The colon following the semicolon must be omitted in this case.

Example:

`ROUT:PATH:DEF "path1",(@F01A11(0104));:ROUT:PATH:DEL "path0"`

This command line is written in its full length and contains two commands separated from each other by the semicolon. Both commands are part of the ROUT:PATH command subystem, i.e. they have two levels in common.

When abbreviating the command line, the second command begins with the level below ROUT:PATH. The colon after the semicolon is omitted. The abbreviated form of the command line reads as follows:

`ROUT:PATH:DEF "path1",(@F01A11(0104));DEL "path0"`

A new command line must always begin with the complete path.

Example:
```
ROUT:PATH:DEF "path1",(@F01A11(0104))
ROUT:PATH:DEL "path0"
```

6.2.3.4 Responses to Queries

A query is defined for each setting command unless explicitly specified otherwise. It is formed by adding a question mark to the associated setting command. The following rules apply to the responses:

- The requested parameter is transmitted without header.
  Example: `CONFigure:RELay:DELay? (@F01A11(0104))`
  Response: 2 (corresponds to 100ms = 2*50ms)
- Character strings are returned enclosed in quotation marks.
  Example: `ROUTe:PATH:CATalog?`
  Response: `"path1","path2"`

6.2.3.5 SCPI Parameters

Most commands require one or more parameters to specify their function. The parameters must be separated from the header by a "white space". Permissible parameters are numerical values and character strings. The parameter types and the permissible ranges of values are specified in the command description.

Overview of Syntax Elements

: The colon separates the key words of a command. In a command line the separating semicolon marks the uppermost command level.

; The semicolon separates two commands of a command line. It does not alter the path.

, The comma separates several parameters of a command.

? The question mark forms a query.

* The asterisk marks a common command.

', " Quotation marks introduce a string and terminate it.

A "white space" (ASCII-Code 0 to 9, 11 to 32 decimal, e.g. blank) separates header and parameter.

6.2.3.6 Use of SCPI Subsystems

The structure of the instrument-control commands implemented by the R&S OSP is described in chapter 7.4, Instrument-Control Commands. Due to this structure, some SCPI subsystems are used in a specific manner. The following list gives an overview.

ROUTE... Controls relays and I/O channels

READ... Fetches the condition of I/O input channels and operation counters

CONFIGURE... Set instrument's parameters

MMEMORY... Stores data durable on compact flash or loads data from flash

DIAGNOSTIC... Provides hardware information of the system

6.3 The R&S OSP Command Processing

The block diagram below shows how remote control commands are serviced in the instrument. The instrument model consists of the following components:

- Input Unit
- Command Recognition
- Data Base and Instrument Hardware
- Status Reporting System
- Output Unit

The individual components work independently and simultaneously. They communicate with each other by means of so-called "messages".

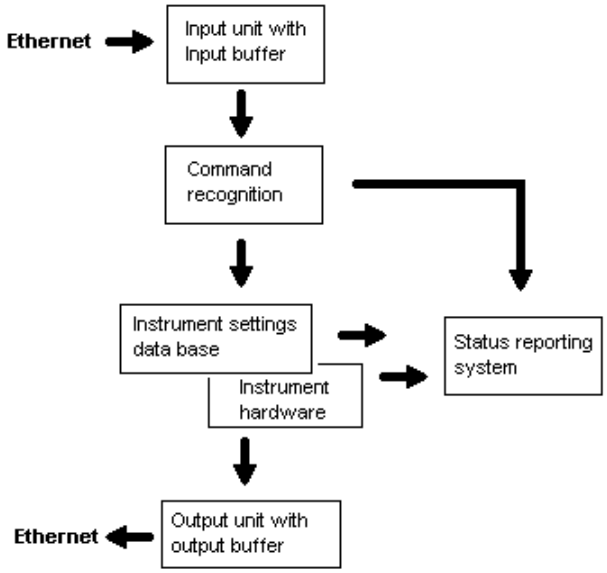

6.3.1 Input Unit

The input unit receives commands character by character from the controller and collects them in the input buffer. The input unit sends a message to the command recognition as soon as the input buffer is full or as soon as it receives a delimiter, <PROGRAM MESSAGE TERMINATOR>, as defined in IEEE 488.2, or the interface message DCL.

If the input buffer is full, the message data traffic is stopped and the data received up to then is processed. Subsequently the traffic is continued. If, however, the buffer is not yet full when receiving the delimiter, the input unit can already receive the next

command during command recognition and execution. The receipt of a DCL clears the input buffer and immediately initiates a message to the command recognition.

6.3.2 Command Recognition

The command recognition stage analyzes the data received from the input unit. It proceeds in the order in which it receives the data. Only a DCL is serviced with priority, e.g. a ROUTe:CLOSe … command (set relay(s) to specified condition(s)) is only executed after the commands received before. Each recognized command is immediately transferred to the data set but not executed immediately.

The command recognition detects syntax errors in the commands and transfers them to the status reporting system. The rest of a command line after a syntax error is still executed, if possible. After the syntax check, the range of the numerical parameters is checked, if required.

If the command recognition detects a delimiter or a DCL, it also requests the data set to perform the necessary instrument hardware settings. Subsequently it is immediately prepared to process further commands. This means that new commands can already be serviced while the hardware is still being set ("overlapping execution").

6.3.3 Data Base and Instrument Hardware

The expression "instrument hardware" denotes the part of the instrument fulfilling the actual instrument function. The controller is not included. The data base manages all the parameters and associated settings required for the instrument hardware.

Setting commands lead to an alteration in the data set. The data set management enters the new values (e.g. relay conditions) into the data set, however, it only passes them on to the hardware when requested by the command recognition. This can only occur at the end of a command line, therefore the order of the setting commands in the command line is not relevant.

The commands are only checked for their compatibility among each other and with the instrument hardware immediately before they are transmitted to the instrument hardware. If the instrument detects that execution is not possible, an "execution error" is signaled to the status reporting system. All alterations of the data set are canceled, the instrument hardware is not reset. Due to the delayed checking and hardware setting, however, impermissible instrument states can be set for a short period of time within one command line without this leading to an error. At the end of the command line, however, a permissible instrument state must have been reached again.

Queries induce the data set management to send the desired data to the output unit.

6.3.4 Status Reporting System

The status reporting system collects information on the instrument state and makes it available to the output unit on request. The exact structure and function are described in chapter 6.4, Status Reporting System.

6.3.5 Output Unit

The output unit collects the information requested by the controller, which it receives from the data set management. It processes it according to the SCPI rules and makes it available in the output buffer. If the information requested is longer, it is made available "in portions" without this being recognized by the controller.
If the instrument is addressed as a talker without the output buffer containing data or awaiting data from the data set management, the output unit sends the error message "Query UNTERMINATED" to the status reporting system. No data is sent via the Ethernet, the controller waits until it has reached its time limit. This behavior is specified by SCPI.

6.4 Status Reporting System

The status reporting system stores all information on the present operating state of the instrument, and on errors which have occurred. This information is stored in the status registers and in the error queue. Both can be queried via Ethernet.

Hierarchy of status registers

As shown in the Overview of Status Registers, the status information is of hierarchical structure.

- STB, SRE
  The Status Byte (STB) register and its associated mask register Service Request Enable (SRE) form the highest level of the status reporting system. The STB provides a rough overview of the instrument status, collecting the information of the lower-level registers.
- ESR, SCPI registers
  The STB receives its information from the following registers:
  The Event Status Register (ESR) with the associated mask register standard event status enable (ESE).
  The optional STATus:OPERation and STATus:QUEStionable registers which are defined by SCPI and contain detailed information on the instrument.
  The R&S OSP does not use the STATus:OPERation and the STATus:QUEStionable register
- IST, PPE
  The IST flag ("Individual STatus"), like the SRQ, combines the entire instrument status in a single bit. The PPE is associated to the IST flag. It fulfills an analogous function for the IST flag as the SRE does for the service request.
- Output buffer
  contains the messages the instrument returns to the controller. It is not part of the status reporting system but determines the value of the MAV bit in the STB.

All status registers have the same internal structure.

SRE register

The service request enable register SRE can be used as ENABle part of the STB if the STB is structured according to SCPI. By analogy, the ESE can be used as the ENABle part of the ESR.

6.4.1 Overview of Status Registers

The status registers of the R&S OSP are implemented as shown below.

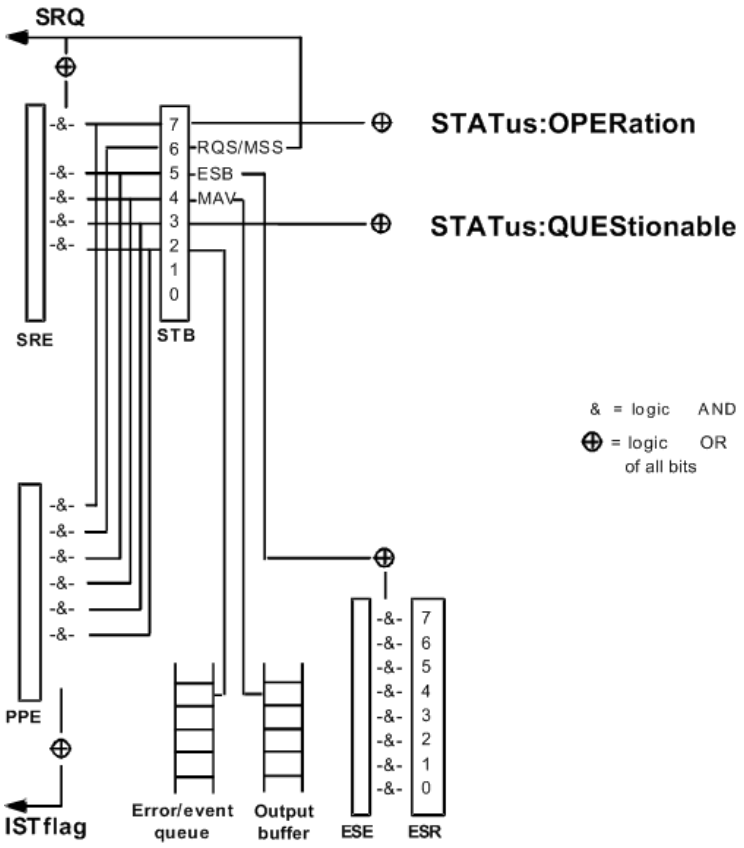

6.4.2 Contents of the Status Registers

The individual status registers are used to report different classes of instrument states or errors. The following status registers belong to the general model described in IEEE 488.2:

- The Status Byte (STB) gives a rough overview of the instrument status.
- The Event Status Register (ESR) indicates general instrument states.

6.4.2.1 STB and SRE

The Status Byte (STB) provides a rough overview of the instrument status by collecting the pieces of information of the lower registers. The STB represents the highest level within the SCPI hierarchy. A special feature is that bit 6 acts as the summary bit of the remaining bits of the status byte.

The Status Byte (STB) is linked to the Service Request Enable (SRE) register on a bit-by-bit basis.

The STB is indicating the current instrument state.

The SRE represents the Enable part of an SCPI register. If a bit is set in the SRE and the associated bit in the STB changes from 0 to 1, the summary bit 6 (MSS) of the STB is set.

Bit 6 of the SRE is ignored because it corresponds to the summary bit of the STB.

Related common commands

The STB is read out using the command *STB?.
The SRE can be set using command *SRE and read using *SRE?.
The bits in the STB are defined as follows:

Bit No.	Meaning
2	Error Queue not empty This bit is set when an entry is made in the error queue.
3	QUEStionable status summary bit The bit indicates a questionable instrument status, which can be further pinned down by polling the QUEStionable register.
4	MAV bit(message available) This bit is set if a message is available and can be read from the output buffer. This bit can be used to automatically transfer data from the instrument to the controller.
5	ESB bit Sum bit of the event status register. It is set if one of the bits in the event status register is set and enabled in the event status enable register. Setting of this bit implies an error or an event which can be further pinned down by polling the event status register.
6	MSS bit (master status summary bit) This bit is set if one of the other bits of this registers is set together with its mask bit in the service request enable register SRE.
7	OPERation status register summary bit This bit is set if an EVENt bit is set in the OPERation-Status register and the associated ENABle bit is set to 1.

6.4.2.2 ESR and ESE

The Event Status Register (ESR) indicates general instrument states. It is linked to the Event Status Enable (ESE) register on a bit-by-bit basis.

- The ESR indicates the current instrument state.
- The ESE represents the Enable part of an SCPI register. If a bit is set in the ESE and the associated bit in the ESR changes from 0 to 1, the ESB bit in the Status Byte is set.

Related common commands

The Event Status Register (ESR) can be queried using ESR?.

The Event Status Enable (ESE) register can be set using the command *ESE and read using *ESE?.

The bits in the ESR are defined as follows:

Bit No.	Meaning
0	Operation Complete This bit is set on receipt of the command *OPC after all previous commands have been executed.
1	Request Control This bit is set if the instrument requests the controller function. This is the case when a hardcopy is sent to a printer or a plotter.
2	Query Error This bit is set if either the controller wants to read data from the instrument without having sent a query, or if it does not fetch requested data and sends new instructions to the instrument instead. The cause is often a query which is faulty and hence cannot be executed.
3	Device-Dependent Error This bit is set if a device-dependent error occurs. An error message with a number between -300 and -399 or a positive error number, which describes the error in greater detail, is entered into the error queue (see).
4	Execution Error This bit is set if a received command is syntactically correct, but cannot be performed for other reasons. An error message with a number between -200 and -300, which describes the error in greater detail, is entered into the error queue (see).
5	Command Error This bit is set if a command which is undefined or syntactically incorrect is received. An error message with a number between -100 and -200, which describes the error in greater detail, is entered into the error queue (see).
6	User Request This bit is set on pressing the LOCAL key, i. e. when the instrument is switched over to manual control.
7	Power On(supply voltage on) This bit is set when the instrument is switched on.

6.4.2.3 STATus:OPERation

The STATus:OPERation register contains conditions which are part of the instrument's normal operation.
The R&S OSP does not use the STATus:OPERation register:

6.4.2.4 STATus:QUEStionable

The STATus:QUEStionable register indicates whether the data currently being acquired is of questionable quality.

The R&S OSP does not use the STATus:QUEStionable register:

6.4.3 Application of the Status Reporting System

The purpose of the status reporting system is to monitor the status of one or several devices in a system. To do this and react appropriately, the controller must receive and evaluate the information of all devices. The following standard methods are used:

- Query of an Instrument Status by means of commands

- Query of Error Queue

6.4.3.1 Query of an Instrument Status

- Each part of the instruments status registers can be read by means of queries with common commands *STB? and *ESR?.

All queries return a decimal number which represents the bit pattern of the status register. This number is evaluated by the controller program.

Decimal representation of a bit pattern

The STB and ESR registers contain 8 bits. The contents of a status register is keyed and transferred as a single decimal number. To make this possible, each bit is assigned a weighted value. The decimal number is calculated as the sum of the weighted values of all bits in the register that are set to 1.

Bits	0	1	2	3	4	5	6	7	...
Weight	1	2	4	8	16	32	64	128	...

Example: The decimal value 40 = 32 + 8 indicates that bits no. 3 and 5 in the status register (e.g. the QUEStionable status summary bit and the ESB bit in the Status Byte) are set.

6.4.3.2 Error Queue

Each error state in the instrument leads to an entry in the error queue. The entries of the error queue are detailed plain text error messages that can be queried via remote control using SYSTem:ERRor[:NEXT]? or SYSTem:ERRor:ALL?. Each call of SYSTem:ERRor[:NEXT]? provides one entry from the error queue. If no error messages are stored there any more, the instrument responds with 0, "No error".

Especially in the test phase of a controller program the error queue should be queried regularly since faulty commands from the controller to the instrument are recorded there as well.

6.4.4 Reset Values of the Status Reporting System

The table below indicates the effects of various commands upon the status reporting system of the R&S OSP.

Event	**Switching on supply voltagePower-On-Status-Clear**		**DCL,SDC (Device Clear, Selected Device Clear)**	***RST or SYSTem:PRESet**	**STATus:PRESet**	***CLS**
Effect	0	1				
Clear STB,ESR		yes				yes
Clear SRE,ESE		yes				
Clear PPE		yes				
Clear EVENt parts of the registers		yes				yes
Clear ENABle parts of all OPERation-and QUESTionable registers, Fill ENABle parts of all other registers with "1".		yes			yes	
Fill PTRansition parts with „1" Clear NTRansition parts		yes			yes	
Clear error queue	yes	yes				yes
Clear output buffer	yes	yes	yes	1)	1)	1)
Clear command processing and input buffer	yes	yes	yes			

1) Every command being the first in a command line, i.e. immediately following a <PROGRAM MESSAGE TERMINATOR> clears the output buffer.

7 Remote Command Reference

This chapter lists all common commands and instrument-control commands for the R&S OSP.

- Common Commands
- Instrument-Control Commands

For an overview of these commands refer to the Alphabetical List of Commands (System).

Contents of this chapter

The commands listed in this chapter control the R&S OSP

7.1 Special Terms and Notation

This section explains the meaning of special syntax elements used in the SCPI command reference sections. A general description of the SCPI command syntax can be found in chapter 6.2.3.

Information in the command tables

All commands are described according to the same scheme. The following information is provided:

- Complete command syntax and parameter list
- Description of the command and its relationship with other commands
- List and description of the parameters with their numerical ranges, default values and default units.
- SCPI conformance information, supported command types (setting command, query)
- Program example (optional)

Order of commands

The commands are arranged according to the SCPI subsystems. This means that related commands are generally grouped together. Refer to chapter 7.5 for an alphabetical list of all commands.

Parameters

Many commands are supplemented by a parameter or a list of parameters. Parameters either provide alternative options (setting a or setting b or setting c ..., see special character "|"), or they form a list separated by commas (setting x,y).

<Par_Name> In the command tables and lists, parameters are generally described by a name (literal) written in angle brackets (<>). This literal merely serves as a parameters description; in an application program it must be replaced by one of the possible settings reported in the detailed parameter description.

Example: `ROUTe:CLOSe <channel_ist>`
with <channel_list> is for example: (@F01A11(0101))

possible command syntax: ROUTe:CLOSe (@F01A11(0101))

Upper / lower case

Upper/lower case characters characterize the long and short form of the mnemonics in a command. The short form consists of all upper-case characters, the long form of all upper case plus all lower case characters. On the R&S OSP, either the short form or the long form is allowed; mixed forms will generally not be recognized. Either the short form or the long form are permissible. The instrument itself does not distinguish upper case and lower case characters.

Special characters

[ ] in square brackets can be omitted when composing the command header (see SCPI Command Structure and Syntax). The complete command must be recognized by the instrument for reasons of compatibility with the SCPI standard. Parameters in square brackets are optional as well. They may be entered in the command or omitted.
Example: The following command has an optional element:
`ROUTe:PATH[:DEFine] <path_name>,<channel_list> equals`

`ROUTe:PATH <path_name>,<channel_list>`

{ } Braces or curly brackets enclose one or more parameters that may be included zero or more times.

7.2 Naming Conventions

Some SCPI control commands which are introduced in the following chapters need R&S OSP instrument specific parameter strings like <instr_name>, <module_name> or <channel_list>.

For a better understanding on how these parameters strings are built up, this chapter serves as an overview of the naming conventions.

<instr_name> (example: ROUTe:MODule:DEFine <instr_name>,<instr_address>)

An R&S OSP instrument can be operated as stand alone device controlled via LAN. Beside that, it is possible to build up a larger system of several R&S OSP instruments by connecting one or more further R&S OSP instruments to the LAN controlled instrument via CAN bus.

To get access to any R&S OSP instrument in a system, each instrument needs a unique name which appears as parameter in SCPI commands. Even an R&S OSP that is operated as stand alone instrument, must be assigned to a instrument name. All name assignments have to be done only once while configuring the system and are stored durable on the compact flash of the R&S OSP which is directly connected to LAN.

The instrument name must have the following format:

Fxx
xx = 01,02,03,…,09

Examples:
```
F01
F02
…
F09
```

<module_name> (example: READ:MODule:INTerlock <module_name>)

Each R&S OSP can comprise up to three relay or I/O channel modules. The modules are located at the instrument's ports A11, A12 and A13. To select one module of a specific R&S OSP within a system of several R&S OSP instruments, both the instrument name and the port ID is needed. Together they build the module name.

The module name must have the following format:

```
FxxAyy
xx = 01,02,03,…,09
yy = 11,12,13
```

Examples:
```
F01A11
F01A12
F01A13
F02A11
etc.
<channel_list> (example: ROUTe:CLOSe <channel_list>)
```
To access a specific relay or an I/O channel which is part of a module located in an R&S OSP, three pieces of information are needed. The module name, the number of the relay/channel within the module and the condition it has to be set to. In accordance to SCPI this information is building up a channel list.
An R&S OSP channel list must have the following format:
```
(@FxxAyy(ccnn))
xx = 01,02,03,…,09
yy = 11,12,13
cc = 00, 01, 02, …,06 (condition of the relay to be set)
nn = 01, 02, 03, …,16 (relay/channel number within a module)
```

Examples:
```
(@F01A11(0104))
```
added as parameter to a SCPI close command:
```
ROUTe:CLOSe (@F01A11(0104))
```
sets relay 4 on module at location A11 in R&S OSP instrument F01 to condition 1.

`ROUTe:CLOSe (@F01A11(0004))`
sets relay 4 on module at location A11 in R&S OSP instrument F01 to condition 0.
`ROUTe:CLOSe (@F03A12(0601))`
sets relay 1 on module at location A12 in R&S OSP instrument F03 to condition 6 (the relays on module R&S OSP-B102 can be set to one out of six different positions).
Several relays or I/O channels can be set with one command.

Examples:
`ROUTe:CLOSe (@F01A11(0102,0104,0105))`
sets relays 2, 4 and 5 to condition 1.
`ROUTe:CLOSe (@F01A11(0103,0004))`
sets relay 3 to condition 1 and relay 4 to condition 0.
`ROUTe:CLOSe (@F01A12(0102,0104),F01A13(0103),F02A11(0101))`
sets relays 2 and 4 of the module at location A12 in instrument F01 to condition 1, relay 3 of module at location A13 in instrument F01 to condition 1 and relay 1 of module on location A11 in instrument F02 to condition 1.
If a continuous range of relays or I/O channels of one module is to be set to the same condition, the <channel_list> can be written in the following format:
`(@FxxAyy(ccnn:ccmm))`
xx = 01,02,03,…,09
yy = 11,12,13
cc = 00, 01, 02, …,06 (condition of the relay to be set)
nn = 01, 02, 03, …,16 (relay/channel number within a module)
mm = nn + number of continuous relays to be set to the same condition

Examples:
`ROUTe:CLOSe (@F01A11(0101:0106)) is equal to`
`ROUTe:CLOSe (@F01A11(0101,0102,0103,0104,0105,0106))`

7.3 Common Commands

Common commands are described in the IEEE 488.2 (IEC 625-2) standard. These commands have the same effect on different devices. The headers of these commands consist of "*" followed by three letters. Many common commands are related to the status reporting system.

Command	Parameters/ Remarks	Short Description
*CLS – CLear Status	– no query	Sets the status byte (STB), the standard event register (ESR) and the EVENt part of the QUEStionable and the OPERation register to zero. The command does not alter the mask and transition parts of the registers. It clears the output buffer.
*ESE – Event Status Enable	0 to 255	Sets the event status enable register to the value indicated. The query *ESE? returns the contents of the event status enable register in decimal form.
*ESR? – Event Status Read	– query only	Returns the contents of the event status register in decimal form (0 to 255) and subsequently sets the register to zero.
*IDN? – IDentification Query	– query only	Queries the instrument identification string of the R&S OSP.
*OPC – OPeration Complete	–	Sets bit 0 in the event status register when all preceding commands have been executed. This bit can be used to initiate a service request. The query form writes a "1" into the output buffer as soon as all preceding commands have been executed. This is used for command synchronization.
*OPT? – OPTion identification query	– query only	Queries the options included in the instrument and returns a list of the options installed. The response consists of arbitrary ASCII response data according to IEEE 488.2. The options are returned at fixed positions in a comma-separated string. A zero is returned for options that are not installed.
*RST – ReSeT	– no query	Sets the instrument parameters to values for good remote operation. All relays for the R&S OSP are set to their power up states and I/O output channels are set to LOW state.
*SRE – Service Request Enable	0 to 255	Sets the service request enable register to the value indicated. Bit 6 (MSS mask bit) remains 0. This command determines under which conditions the MSS (master status summary) bit of the Status Register is set. The query *SRE? returns the content of the service request enable register in decimal form. Bit 6 is always 0.
*STB? – STatus Byte query	– query only	Reads the contents of the status byte in decimal form.
*TST? – self TeST query	– query only	Initiates the selftest of the instrument and outputs an error code in decimal form (0 = no error)
*WAI – WAIt to continue	– no query	Prevents servicing of the subsequent commands until all preceding commands have been executed and all signals have settled (see also command synchronization and *OPC).

7.4 Instrument-Control Commands

The instrument-control commands for the R&S OSP platform provide access to the relay modules and I/O channel modules. There are configuration commands, commands to access the mass memory and commands to perform diagnostic and administrative tasks. The platform commands belong to the following SCPI subsystems:

- ROUTe Commands
- READ Commands
- CONFigure Commands
- MMEMory Commands
- DIAGnostic Commands
- SYSTem Commands

7.4.1 ROUTe Commands

The SCPI subsystem ROUTe provides ‘signal routing’ capabilities for the R&S OSP. With the commands of this subsystem the user gets access to all relays and I/O channels of the instrument.
The ROUTe subsystem also provides capabilities to define and announce further R&S OSP instruments to build up a system of several R&S OSP instruments. The additional instruments are connected via CAN-Bus.

ROUTe:MODule:DEFine <instr_name>,<instr_address>

This command assigns an instrument name to a number representing an R&S OSP instrument address. The instrument name must have the format ’F01’ up to ’F09’. The instrument address is a number, whereas the first digit represents the type of the R&S OSP instrument and the following digits represent the serial number of the instrument. Once an instrument is assigned to an instrument name, the relays and I/O channels of this instrument can be controlled by channel lists built up from the instrument name, module name, relay number and relay condition. For more information on how a channel list is built up, refer to chapter 7.2, Naming Conventions.

The query of this command, ROUT:MOD:DEF? <instr_name> returns the instrument address that has been previously assigned to the instrument name.

Every R&S OSP instrument in a system that comprises several instruments connected to each other by CAN bus, must be assigned to an instrument name. Even the instrument that is directly connected to LAN.

All assignments are stored durable on the compact flash of the instrument which is directly connected to LAN.

'<instr_name>' Represents an R&S OSP instrument. With this name, the instrument can be selected in channel lists.
Format: F01, F02, .. up to F09

'<instr_address>' Address of an R&S OSP instrument, built up from the instrument type ID and the serial number of the instrument.
Instrument type ID:
2: R&S OSP120
3: R&S OSP130
5: R&S OSP150
Serial number: for example 100001

Example - Set
`ROUT:MOD:DEF F01,3100001`
Assigns the R&S OSP130 instrument with serial number 100001 to the instrument name F01.

Example - Query
`ROUT:MOD:DEF? F01`
`Response: 3100001`

Characteristics
Firmware version V1.0
SCPI-confirmed

ROUTe:MODule:DELete <instr_name>

The previously defined <instr_name> will be deleted from the instrument's internal memory and from the compact flash. Afterwards the relays and I/O channels of this instrument cannot be controlled any longer.

'<instr_name>' Represents the name of an R&S OSP instrument, which previously was assigned to the instrument.
Format: F01, F02, .. up to F09

Example - Set
`ROUT:MOD:DEL F03`
All relay and I/O channel modules of the R&S OSP instrument assigned to the name 'F03' are not longer available.

Characteristics
Firmware version V1.0
SCPI-confirmed. No query.

ROUTe:MODule:DELete:ALL

All previously defined <module_names> will be deleted from the instrument's internal memory and from the compact flash. Afterwards the relays and I/O channels of all instruments that built up a system cannot be controlled any longer.

Example - Set

`ROUT:MOD:DEL:ALL`
All relay and I/O channel modules of all R&S OSP instruments cannot be controlled any longer.

Characteristics

Firmware version V1.0
SCPI-confirmed. No query.

ROUTe:MODule:INIT

The INIT command causes an update of all internal held data of the system of one or several R&S OSP instruments connected via CAN bus. The internal held data comprises data like serial number, part number, hardware code etc. of all modules of all R&S OSP instruments that were previously announced to the system with the command ROUTe:MODule:DEFine <instr_name>,<instr_address>.

The data is read from the flash EEPROM of all modules.

There is no need to send the INIT command right after a new R&S OSP instrument was defined or deleted. To define or delete an instrument means to update the internal held data automatically.

Example

`ROUT:MOD:INIT`
Reads relevant data from the flash EEPROM of all modules of all R&S OSP instruments that build up a system.

Characteristics

Firmware version V1.0
Device-specific. No query.

ROUTe:MODule:CATalog?

The ROUTe:MODule:CATalog? query command returns a list of all relay or I/O channel modules of all R&S OSP instruments that were previously announced to the system with the command ROUTe:MODule:DEFine. Besides the internal module name (e.g. F01A11), also the type of the module is returned (e.g. R&S OSP-B101).

Example

`ROUT:MOD:CAT?`
`Response: "OSP-B101-F01A11","OSP-B102-F01A12"`

For further information on naming conventions of modules, module locations within an instrument and instrument names, please refer to chapter 7.2, Naming Conventions.

Characteristics

Firmware version V1.0
SCPI-confirmed, but device-specific response format.
Query only.

ROUTe:CLOSe <channel_list>

The CLOSe command allows specific individual relays and I/O channels to be set. The CLOSe? query allows the condition of individual relays and I/O channels to be queried. The instrument returns a 1 or 0 for each relay or channel in the list, in the same order as the list is specified. A response of 1 means the relay or the channel is in the condition that is indicated in the <channel_list>. A response of 0 means the channel is not in the condition that is indicated in the <channel_list>.

'<channel_list>' List of relays and I/O channels and their condition to be set or queried. For more information on how a channel list is built up, refer to chapter 7.2, Naming Conventions.

Example - Set

```
ROUT:CLOS (@F01A11(0101),F01A12(0602))
```

Sets relay 1 on module at position A11 in R&S OSP instrument with ID F01 to condition 1.
Sets relay 2 on module at position A12 in R&S OSP instrument with ID F01 to condition 6.

Example - Query

```
ROUT:CLOS? (@F01A11(0101),F01A12(0602))
Response: 1,1
```

(both relays are in the condition indicated in the channel list)
or

```
ROUT:CLOS? (@F01A11(0001),F01A12(0502))
Response: 0,0
```

(none of both relays is in the condition indicated in the channel list)

Characteristics

Firmware version V1.0
SCPI-confirmed, but device-specific <channel_list> format.

ROUTe:CLOSe <Path-name>

The CLOSe command allows a customer-defined path to be set. The path must be defined first and may consist of specific individual relays and I/O channels.

Example - Set

```
ROUT:CLOS "config_01"
```

Sets all the relays, which are defined in the path named `config_01`

Example - Query

```
ROUT:CLOS? "config_01"
Response: 1,1,1
(all relays are in the condition indicated in
the path)
```

```
Response: 0,0,0
(none of the relays is in the condition
indicated in the path)
```

Characteristics

```
Firmware version V2.42
SCPI-confirmed, but device-specific path name.
```

ROUTe:PATH[:DEFine] <path_name>,<channel_list>

The ROUTe:PATH:DEFine command assigns <path_name> as a user-specified way of referring to <channel_list>. This command allows the user to define a list of relays and I/O channels to be set to a specific condition with the use of a <path_name>.

After a path name is defined, it only exists in the instruments internal memory. To permanently store all defined path names in the instrument's compact flash memory, use the command MMEMory:STORe:STATe.

The path name is limited to a string with a maximum of 49 characters.

The query of this command, ROUTe:PATH:DEFine? <path_name> returns information about what conditions are defined for all relays and I/O channels that appear in the <channel_list> associated with <path_name>.

The format of the returned information differs from the format of <channel_list>.

'<path_name>' String parameter to specify the name of the path to be defined.

'<channel_list>' List of relays and I/O channels and their condition to be set or queried.

Example - Set

`ROUT:PATH:DEF "config_01",(@F01A11(0103))`
Determines that path name "config_01" is equivalent to the channel list (@F01A11(0103))
The command
`ROUT:CLOS (@F01A11(0103))`
now equals the command
`ROUT:CLOS "config_01"`
Both commands set relay 3 on module at position A11 in R&S OSP instrument with ID F01 to condition 1.

Example - Query

`ROUT:PATH:DEF? "config_01"`
`Response: 1100103`
The first digit (1) represents the ID of the R&S OSP. Here: F01; second digit (1) represents the module position in the R&S OSP. Here: A11; third, fourth and fifth digits (001) represent the relay condition. Here: Set relay to condition 1; sixth and seventh digits represent the number of the relay (or channel) to be set. Here: Relay number 3 is to be set.
If the queried path name comprises conditions for more than one relay or channel, the returned information blocks are separated by a comma.

Characteristics

Firmware version V1.1
Note: At Firmware version 1.0 the third digit was not available.
SCPI-confirmed, but device-specific response format.

ROUTe:PATH:CATalog?

The ROUTe:PATH:CATalog? query command returns a list of all currently defined path names that are stored in the internal memory of the instrument.

Example

`ROUT:PATH:CAT?`
`Response: "config_01","config_02","config_03"`

Characteristics

Firmware version V1.0
SCPI-confirmed. Query only.

ROUTe:PATH:DELete[:NAME] <path_name>

The previously defined <path name> will be deleted from the instrument's internal memory.

'<path_name>' String parameter to specify the name of the path to be deleted.

Example - Set `ROUT:PATH:DEL "config_03"`
The path config_03 will be deleted.

Characteristics Firmware version V1.0
SCPI-confirmed. No query.

ROUTe:PATH:DELete:ALL

All previously defined path names will be deleted from the instrument's internal memory.

Example - Set `ROUT:PATH:DEL:ALL`
Afterwards, a call of
`ROUT:PATH:CAT?`
will return following response: ""

Characteristics Firmware version V1.0
SCPI-confirmed. No query.

7.4.2 READ Commands

The READ commands allow to acquire data from the different relay or I/O modules of an R&S OSP. From relay modules the number of life time operation cycles of each relay can be acquired, it can be acquired whether relay module R&S OSP-B104 is in Interlock state or not and the condition of all input channels of I/O modules can be acquired.

READ:RELay:OPERations? <channel_list>

Acquires the number of operation cycles of each relay (and even of I/O channels) that appears in the <channel_list>. The instrument returns a number for each relay or channel in the list, in the same order as the list is specified. For example a response of 100 means the relay has been closed a hundred times and opened again in it's life time. The number of operation cycles of each relay is stored durable in the flash EEPROM of the module the relay is part of. This is done after every hour of operation time of an R&S OSP (only if the counter has changed). This is also done when the instrument receives the query command READ:RELay:OPERations? To make sure that no operation cycles 'get lost' this READ query command should be sent before a remote control session is quit.

'<channel_list>' List of relays and I/O channels and their condition the number of operation cycles is queried.
For more information on naming conventions and how a channel list is built up, please refer to chapter 7.2, Naming Conventions.

Example

```
READ:RELay:OPERations? (@F01A11(0101,0105))
Response: 86,1267
```

Relay 1 on module at position A11 in R&S OSP instrument with ID F01 was set 86 times to condition 1 in it's life time.
Relay 5 on module at position A11 in R&S OSP instrument with ID F01 was set 1267 times to condition 1 in it's life time.

Characteristics

Firmware version V1.1
Device-specific. Query only.

READ:MODule:INTerlock? <module_name>

Acquires the interlock state of a relay module. At the moment this command applies only to module R&S OSP-B104 and is ignored if <module_name> specifies any other module. For more information about the meaning of interlock, please refer to the description of module R&S OSP-B104.

'<module_name>' Represents the ID of an R&S OSP-B104 module within an R&S OSP instrument.
For more information on naming conventions and how a module ID is built up, please refer to chapter 7.2, Naming Conventions.

Example

```
READ:MODule:INTerlock? F01A12
Response: 1
```

The R&S OSP-B104 module at position A12 in R&S OSP instrument with ID F01 is in interlock state.

Characteristics

Firmware version V1.1
Device-specific. Query only.

READ:IO:IN4? <module_name>

Acquires the condition of the four I/O input channels of module R&S OSP-B104. The returned result is an integer value that represents the condition of all input channels of the module. This integer value is in the range of 0 (all channel are logical 0-LOW) to 15 (all channel are logical 1-HIGH).

'<module_name>' Represents the ID of an R&S OSP-B104 module within an R&S OSP instrument.
For more information on naming conventions and how a module ID is built up, please refer to chapter 7.2, Naming Conventions.

Example

```
READ:IO:IN4? F01A13
Response: 4
```

4-bit binary equivalent of this value: 0100. Input channel 3 (one-based) of the R&S OSP-B104 module at position A13 in R&S OSP instrument with ID F01 is in condition HIGH. All other available channels are in condition LOW.

Characteristics Firmware version V1.1
Device-specific. Query only.

READ:IO:IN6? <module_name>

Acquires the physical condition of the six relays located on an R&S OSP-B106 module. There are three relays that provide N connectors and three relays that provide BNC connectors at the front of the module R&S OSP-B106. At the moment it is only possible to acquire the physical condition of the BNC relays which are numbered 4, 5 and 6.
The returned result is an integer value that is equivalent to a six bit binary value whereas bit number 3, 4 and 5 represents the condition of the BNC relays numbered 4, 5 and 6. A closed relay is indicated by a bit value of 1, an open relay is indicated by a bit value of 0.

'**<module_name>**' Represents the ID of an R&S OSP-B106 module within an R&S OSP instrument.
For more information on naming conventions and how a module ID is built up, please refer to chapter 7.2, Naming Conventions.

Example

```
READ:IO:IN6? F02A11
Response: 8
```

6-bit binary equivalent of this value: 001000. Relay 4 (one-based) of the R&S OSP-B106 module at position A11 in R&S OSP instrument with ID F02 is in ‘closed’-condition. All other relays are in ’open’-condition.

Characteristics Firmware version V1.3
Device-specific. Query only.

READ:IO:IN16? <module_name>

Acquires the condition of all input channels of an I/O module. Up to sixteen input channels (like on module R&S OSP-B103) can be queried. The returned result is an integer value that represents the condition of all input channels of the module. This

integer value is in the range of 0 (all channel are logical 0-LOW) to 65535 (all channel are logical 1-HIGH).

'<module_name>' Represents the ID of a I/O module within an R&S OSP instrument.
For more information on naming conventions and how a module ID is built up, please refer to chapter 7.2, Naming Conventions.

Example

```
READ:IO:IN16? F01A13
```

```
Response: 4
```

16-bit binary equivalent of this value: 0000 0000 0000 0100.
Input channel 3 (one-based) of the I/O module at position A13 in R&S OSP instrument with ID F01 is in condition HIGH. All other available channels are in condition LOW.

Characteristics

Firmware version V1.0
Device-specific. Query only.

7.4.3 CONFigure Commands

CONFigure:POWerup:RESet?

This command returns the actual powerup-reset condition.

Response Two conditions in quotation-marks.

Example `CONF:POW:RES?`
Response: `"PowerUpReset: ON", "PowerUpReset: OFF"`

Characteristics Firmware version 2.51
Query only

CONFigure:POWerup:RESet “ON”

This command just effects OSP modules with latched relay types. In the powerup-reset condition ON all latched SPDT relay types will be set to position 2. Latched SPxT relay types are set to open state.

Example `CONF:POW:RES “ON”`
Sets the powerup-reset condition.

Characteristics Firmware version 2.51
SCPI confirmed. No query.

CONFigure:POWerup:RESet “OFF”

This command again effects OSP modules with latched relay types. In the powerup-reset condition OFF all latched relay types will keep their state when switching the OSP unit OFF and ON again.

Example `CONF:POW:RES “OFF”`
Sets the powerup-reset condition.

Characteristics Firmware version 2.51
SCPI confirmed. No query.

CONFigure:RELay:DELay <channel_list>

At the moment, this command applies only to the four power relays located on module R&S OSP-B104. It allows to set a time delay for relay operations. This delay determines the period of time, which is reserved for a power relay to change its condition. The 8-bit delay value has a resolution of 50 ms. The adjustable time period spreads from 0 second to 12.75 seconds (values: 0-255). Default value: 2 (delay time: 100 ms). After a ROUT:CLOSe command that modifies the condition of a relay on the

R&S OSP-B104, the instrument only accepts further remote control commands after this period of time. This makes sure that the condition change process of a power relay has completed, before further commands are executed.

If delay time is modified, the new value will be stored durable on compact flash.

'<**channel_list**>' List of relays and their associated delay times to be set (only relays on module R&S OSP-B104).

Example - Set `CONFigure:RELay:DELay (@F01A11(411:414))`
All four relays on module at position A11 in R&S OSP instrument with ID F01 are configured to a delay time of 200 ms to change their conditions. The last two digits of each entry represent the name of the relay, the (up to three) leading digits represent the delay time. In this example the delay time is 4 * 50 ms.

The four relays on R&S OSP-B104 are named 11, 12, 13 and 14. The offset of 10 is necessary to separate the relays from the I/O channels that are also located on the module R&S OSP-B104. The names of the I/O channels start with 1.

Example - Query `CONFigure:RELay:DELay? (@F01A11(11:14))`
`Response: 4,4,4,4`
In the <channel_list> of the query command only the relay names (two digits) appear. Any leading digits will be ingnored.

Characteristics Firmware version V1.1
Device-specific. Command and query.

7.4.4 MMEMory Commands

The SCPI subsystem MMEMory provides mass storage capabilities for the R&S OSP. A set of defined path configurations can be stored durable on the R&S OSP compact flash memory.

File names can be chosen according to Linux™ conventions.

MMEMory:STORe:STATe <numeric_value>,<file_name>

Stores a file durable on the compact flash memory of an R&S OSP by transferring it from the instrument's internal memory. The stored file comprises the actual defined set of path configurations (previously defined with command ROUTe:PATH[:DEFine] <path_name>,<channel_list>.

'**<numeric_value>**'	Ignored in actual Firmware version. Reserved for future purposes.
'**<file_name>**'	String parameter to specify the name of the file to be stored.
Example	`MMEM:STOR:STAT 0,”my.pathconfigs”` Stores file my.pathconfigs on the flash memory
Characteristics	Firmware version V1.0 SCPI-confirmed. No query.

MMEMory:LOAD:STATe <numeric_value>,<file_name>

Loads a file from the compact flash memory to the instrument’s internal memory. The loaded file comprises a set of path configurations.

All path configurations located in the instrument’s internal memory before execution of this command will be overwritten with the path configurations associated with the loaded file.

'<numeric_value>'	Will be ignored in actual Firmware version. Reserved for future purposes.
'<file_name>'	String parameter to specify the name of the file to be loaded.
Example	`MMEM:LOAD:STAT 0,”my.pathconfigs”` Loads file my.pathconfigs from the flash memory to the instrument’s internal memory.
Characteristics	Firmware version V1.0 SCPI-confirmed, no query.

MMEMory:CATalog?

Returns all files that are stored on the compact flash memory. Each of these files is comprising a set of path configurations.

Response	One or more file names in quotation-marks. If more than one file name is returned, the names are separated by a comma.
Example	`MMEM:CAT?` `Response: "pathconfigs.savrcl","my.pathconfigs"`
Characteristics	Firmware version V1.0 Device-specific response. Query only.

MMEMory:DELete '<file_name>'

Removes a file from the compact flash memory.

'<file_name>'	String parameter to specify the name of the file to be removed.
Example	`MMEM:DEL "my.pathconfigs"` Removes file my.pathconfigs from the flash memory.
Characteristics	Firmware version V1.0 SCPI-confirmed. No query.

7.4.5 DIAGnostic Commands

The purpose of the DIAGNOSTIC subsystem is to provide instrument service and diagnostic commands. All commands in this subsystem are device-specific.

DIAGnostic:SERVice:STESt:RESult?

Starts an instrument internal self test routine and returns information about any error that is detected.

Example - Query	`DIAG:SERV:STES:RES?`
	`Response: "Passed"`
	or, for example if an error is detected:
	`"Failed, OSP-B101-F01A11, Error XY occurred."`

Characteristics	Firmware version V1.0 Device-specific. Query only.

DIAGnostic:SERVice:HWINfo?

Returns information about all components (mainboards and modules) that are part of the complete system of one or several R&S OSP instruments.

The returned component information comprises:

- location ID
- name
- serial number
- part number
- hardware code
- product index.

The response is a string in following format:
”<location>|<name>|<sn_nbr>|<part_nbr>|<hardware_code>|<product_index>“

Example – Query	`DIAG:SERV:HWIN?` `Response:`

```
"F01|OSPMAINBOARD|100123|1505.3050.04|0|03.00",
"F01A11|OSP-B101|100001|1505.3250.02|0|01.00",
"F01A12|OSP-B102|100002|1505.3260.02|0|01.00",
"F01A13|OSP-B103|100001|1505.3270.02|0|01.00",
"F02|OSPMAINBOARD|100123|1505.3050.04|0|03.00",
"F02A11|OSP-B101|100001|1505.3250.02|0|01.00",
```

The hardware information query command detected two R&S OSP instruments with ID F01 and F02. The instrument F01 comprises a mainboard and three modules:
B101 located at A11,
B102 located at A12,
B103 located at A13.
The instrument F02 comprises a mainboard and only one module:
B101 located at A11.

Characteristics Firmware version V1.0
Device-specific. Query only.

7.4.6 SYSTem Commands

The SYSTem subsystem contains functions that are not related to instrument performance. All commands are SCPI confirmed.

SYSTem:DFP?

Queries the device footprint of the instrument, which means the equipment's configuration. The retrieved information is in machine-readable form (for example in xml format), suitable for further processing.

Example `SYST:DFP?`
Queries the device footprint of the instrument and returns an ASCII string.

Characteristics Firmware version V.57.
SCPI confirmed. Query only.

SYSTem:ERRor:ALL?

Queries and at the same time deletes all entries in the error queue.

The entry consists of an error number and a short description of the error. Positive error numbers are instrument-dependent. Negative error numbers are reserved by the SCPI standard.

Example `SYST:ERR:ALL?`
Query all entries in the error queue. “0,"No error"” is returned if the error queue is empty.

Characteristics Firmware version V1.00.
SCPI confirmed. Query only.

SYSTem:ERRor[:NEXT]?

Queries and at the same time deletes the oldest entry in the error queue. Operation is identical to that of STATus:QUEue[:NEXT]?
The entry consists of an error number and a short description of the error. Positive error numbers are instrument-dependent. Negative error numbers are reserved by the SCPI standard.

Example `SYST:ERR?`
Query the oldest entry in the error queue. 0,"No error" is returned if the error queue is empty.

Characteristics Firmware version V1.00.
SCPI confirmed. Query only.

SYSTem:ERRor:CODE:ALL?

Queries and at the same time deletes all entries in the error queue.
The command returns the error numbers without any description of the errors. Positive error numbers are instrument-dependent. Negative error numbers are reserved by the SCPI standard.

Example `SYST:ERR:CODE:ALL?`
Query all entries in the error queue. "0" is returned if the error queue is empty.

Characteristics Firmware version V1.00.
SCPI confirmed. Query only.

SYSTem:ERRor:CODE[:NEXT]?

Queries and at the same time deletes the oldest entry in the error queue.
The command returns the error number without any description of the error. Positive error numbers are instrument-dependent. Negative error numbers are reserved by the SCPI standard.

Example `SYST:ERR:CODE?`
Query the oldest entry in the error queue. "0" is returned if the error queue is empty.

Characteristics Firmware version V1.00.
SCPI confirmed. Query only.

SYSTem:NETWork:ADRess?

Returns the current Network address.

Response Address of eth0 and eth0:1 in quotation marks

Example `SYST:NETW:ADR?`
Response: `"eth0: 0.0.0.0 eth0:1: 192.168.48.147"`

Characteristics Firmware version 2.51
Query only.

SYSTem:NETWork:GATeway?

Returns the current Gateway address.

Response: Gateway address in quotation marks

Example `SYST:NETW:GAT?`
Response: `"172.50.0.0"`

Characteristics Firmware version 2.51
Query only.

SYSTem:NETWork:MODe?

Returns the current Network configuration mode.

Response Two conditions in quotation-marks.

Example `SYST:NETW:MOD?`
Response: `"DHCP_AUTO", "DHCP_STATIC"`

Characteristics Firmware version 2.51
Query only.

SYSTem:NETWork:MODe "AUTO"

Sets Network Mode to Automatic. This is the Default Network Mode for OSP. DHCP is supported.

Example **`SYST:NETW:MOD "AUTO"`**

Characteristics Firmware version 2.51
SCPI confirmed. No query.

SYSTem:NETWork:STATic "<IpAddr>","<Netmask>","<Gateway>"

Sets Network Mode to Static (no DHCP support) and defines Gateway address.

Example `SYST:NETW:STAT "192.168.0.10", "255:255:255:0", "172.50.0.0"`

Characteristics Firmware version 2.51
SCPI confirmed. No query.

SYSTem:OPTion:CATalog?

Queries the current GUI info line setting. The command returns a string showing the actual setting.

Example `SYST:OPT:CAT?`

Response "*MAININFO OFF*": no info line is enabled

Response "*MAININFO TEXT*": GUI display shows text info

Response "*MAININFO PATH*": GUI display shows path info

Characteristics Firmware version 2.57
Query only.

SYSTem:OPTion:SET “MAININFO OFF”

Disables the GUI info line. This is the default state.

Example `SYST:OPT:SET ”MAININFO OFF”`

Characteristics Firmware version V2.57
SCPI confirmed. No query.

SYSTem:OPTion:SET “MAININFO PATH”

Enables the path info line. Before enabling it, you must set one valid path by ROUTe:CLOSe <path_name>. After enabling the path info line for the first time, you must press the STATUS key on the R&S OSP front panel.

Example `SYST:OPT:SET ”MAININFO PATH”`

Characteristics Firmware version V2.57
SCPI confirmed. No query.

SYSTem:OPTion:SET “MAININFO TEXT”

Enables the text info line. Before enabling it, you must define a text string by CONF:MAIN:TEXT ”your string”. After enabling the text info line for the first time, you must press the STATUS key on the R&S OSP front panel.

Example `SYST:OPT:SET ”MAININFO TEXT”`

Characteristics Firmware version V2.57
SCPI confirmed. No query.

SYSTem:OPTion:DEL “DUMMY”

Deletes any existing string that was defined for the text info line.

Example `SYST:OPT:DEL ”DUMMY”`

Characteristics Firmware version V2.57
SCPI confirmed. No query.

CONFig:MAINinfo:TEXT ”your string”

Defines a string to be displayed on the R&S OSP display.

Example `CONF:MAIN:TEXT ”your string”`

Characteristics Firmware version V2.57
SCPI confirmed. No query.

CONFig:MAINinfo:TEXT?

Queries the current text info string. The command returns a string showing the actual content of the text info line.

Example `CONF:MAIN:TEXT?`

Response: "*your string*"

SYSTem:PRESet

Sets the instrument parameters to default values. The command corresponds to the *RST command.

Example `SYST:PRES`
Force the R&S OSP to a reset state.

Characteristics Firmware version V1.00
SCPI confirmed. No query.

SYSTem:VERSion?

Returns the SCPI version number to which the instrument complies. The instrument complies to the final SCPI version 1999.0.

Example `SYST:VERS?`
Query the SCPI version.

Characteristics Firmware version V1.00
SCPI confirmed. Query only.

7.5 Alphabetical List of Commands (System)

8 Applications

The following chapter provides an overview on the application of the R&S OSP within EMC systems and the use with the application software R&S EMC32 as well as with other software platforms.

A description on system extension and usage of particular R&S OSP modules is included.

8.1 R&S OSP and R&S EMC32 Software

The Measurement Software EMC32 is the R&S application software for electromagnetic interference (EMI) and electromagnetic susceptibility (EMS) measurement tasks.

The R&S EMC32 software already is prepared to support the R&S OSP. The following chapter shows the required steps for the integration of the R&S OSP and its use with the R&S EMC32 software.

The R&S OSP together with the different R&S OSP modules can be configured for the different switching tasks as they are required for EMI and EMS measurements.

8.1.1 Configuration of the R&S EMC32 for R&S OSP

The following steps require knowledge on the operation of the EMC32 software. There are no explanations given concerning the use of the EMC32; for details of the operation of the EMC32 refer to the manual “R&S EMC Measurement Software EMC32”.

As a first step, the new device R&S OSP is to be added to the EMC32 device list.

With the EMC32 software started, the function >Extras >Device List is selected. The dialog for the EMC32 device configuration will be displayed.

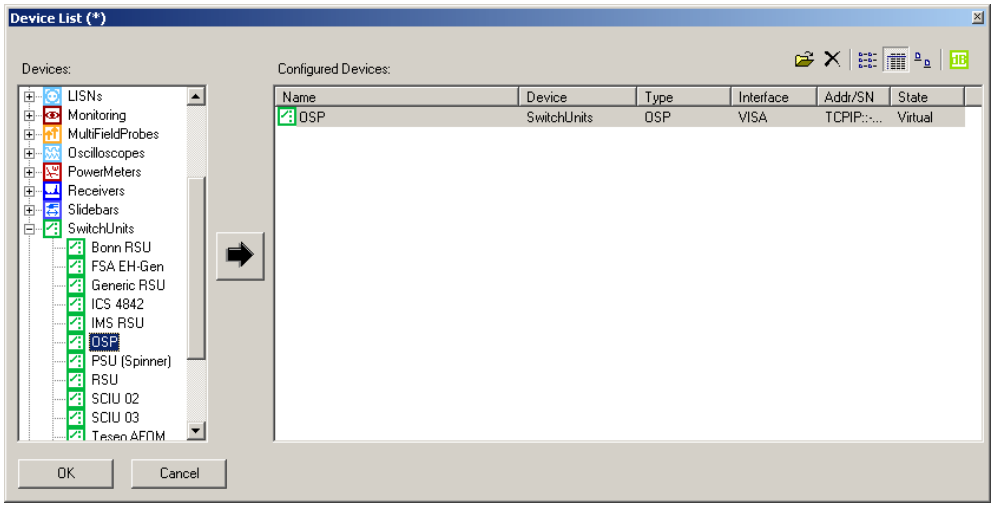

In the Device list which is shown in the left box, the device type SwitchUnits and device R&S OSP is selected.

When pressing this button, the device OSP is taken over into the EMC32 device configuration and displayed in the box Configured Devices

By double-clicking the device OSP, the dialog for further configuration of the Device is opened.

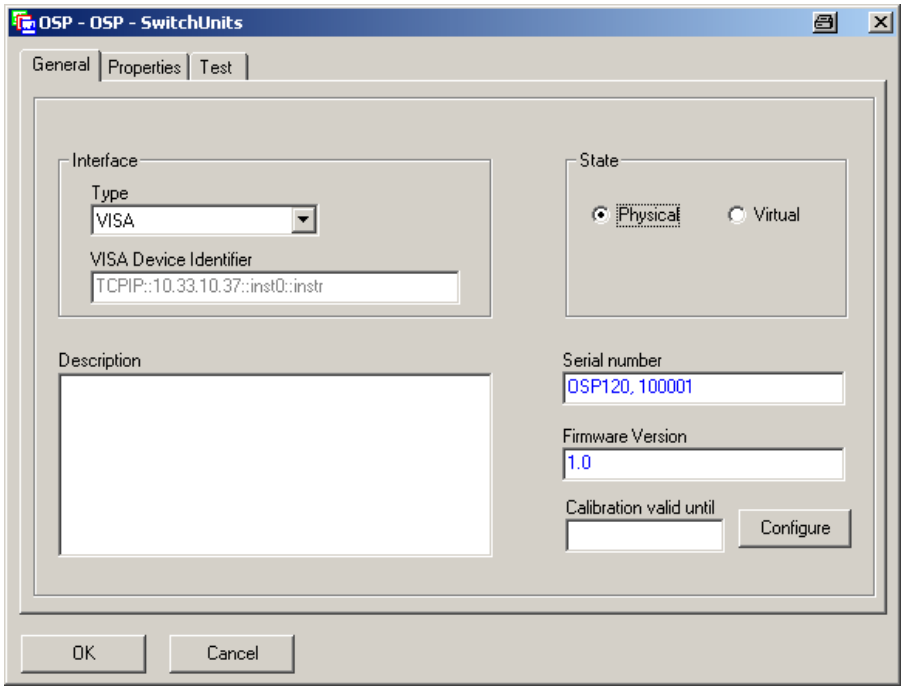

Selecting the tab General allows to define the interface setting. The OSP is addressable via LAN interface. Therefore the Interface Type to be selected for the EMC32 is “VISA”.

Interface Type	The click box is used to select VISA as interface type.
VISA Device Identifier	Here the actual IP address of the R&S OSP is to be entered. Note that the complete string must be entered as follows: TCPIP::xx.xx.xx.xx::inst0::INSTR where xx.xx.xx.xx is the actual IP address. Note that the part “::inst0” of the VISA string is optional.
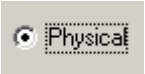	If the Interface Type and the VISA Device Identifier are correct, the driver state is switched to Physical by selection of this button.

If your computer is equipped with a firewall function, it may be necessary to allow the firewall to unlock the EMC32. See chapter 3.3.1 for an example.

It is recommended to allow free access to Internet for the EMC32.

For information on the actual LAN address for the R&S OSP please refer to chapter 3.1.

8.1.2 Defining the R&S OSP Properties in the R&S EMC32

Selecting the tab Properties opens the dialog to define the properties of the R&S OSP.

The OSP driver reads the actual paths from the instrument and allows to remove paths.

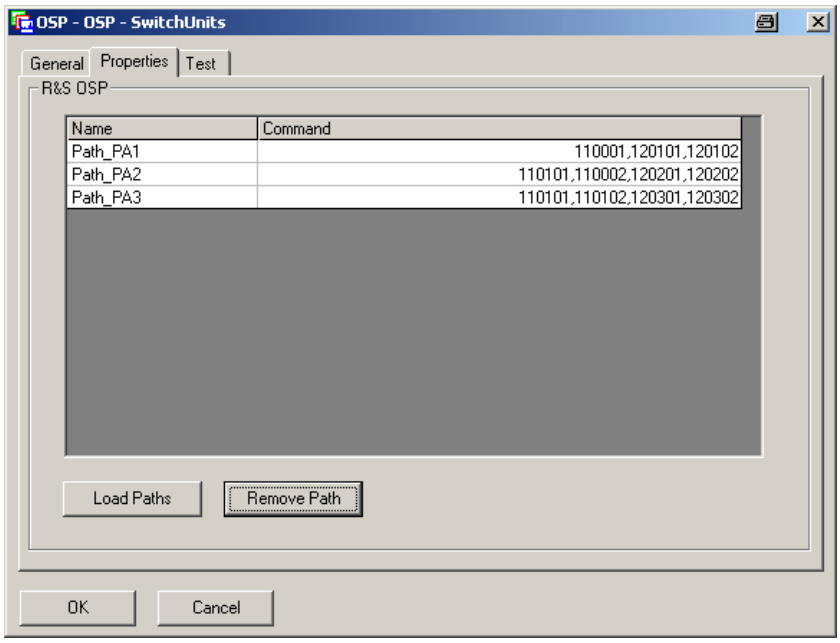

The path names shown in the above dialog have to be defined for the R&S OSP prior to the use with EMC32.

R&S OSP properties

The definition of the EMC32 properties for the R&S OSP require a path configuration; the paths already must be predefined in the R&S OSP. See chapter 3.4 for path configuration.

Pressing this button loads all paths defined in the R&S OSP to the EMC32 application

The path which is highlighted in the path name list will be deleted in the EMC32 application. The path is not deleted from the flash memory in the R&S OSP. This utility

allows to take over only the required paths from the R&S OSP into the EMC32 application:

OK

Press the OK button to store the actual property settings in the EMC32.

Cancel

Selecting the Cancel button leaves the dialog without saving.

8.1.3 Setting the R&S OSP with the R&S EMC32

If the R&S OSP is configured as a switching device within the EMC32 as described above, the path setting is straight forward.

For a quick test, the tab Test is pressed. The following dialog allows to select and switch the paths defined in the Properties of the R&S OSP.

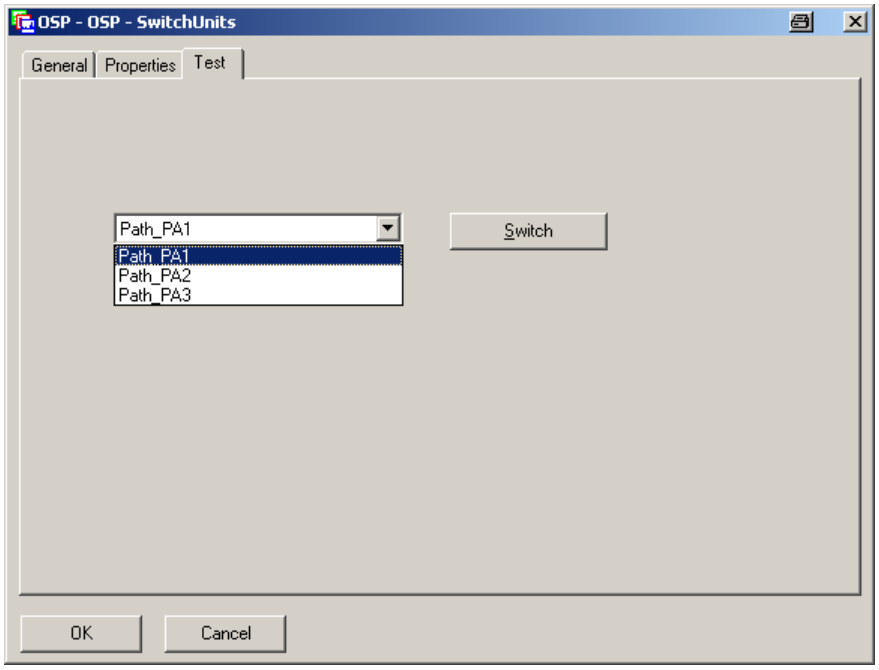

Via the click box, the path to be switched is selected.

Switch

Pressing the Switch button will cause the path which is highlighted to be switched in the R&S OSP.

The further use of the Switch Unit R&S OSP within the R&S EMC32 like the definition of the device SignalPaths is done in the usual manner with the R&S EMC32 software. There is no further description in this manual; please refer to the EMC32 manual for detailed information.

8.1.4 Interlock Functionality with R&S EMC32

An interlock monitoring in an EMS system can be achieved either with the module R&S OSP-B103 or R&S OSP-104. Each of these modules has the functionality of verifying if a line of an input port is connected to +28 V (closed interlock) or not (open

interlock). For this purpose one line of the input ports is used. The open interlock then will stop the measurement.

With the R&S EMC32 software started, the function >Extras >Device List is selected. The dialog for the R&S EMC32 device configuration is displayed.

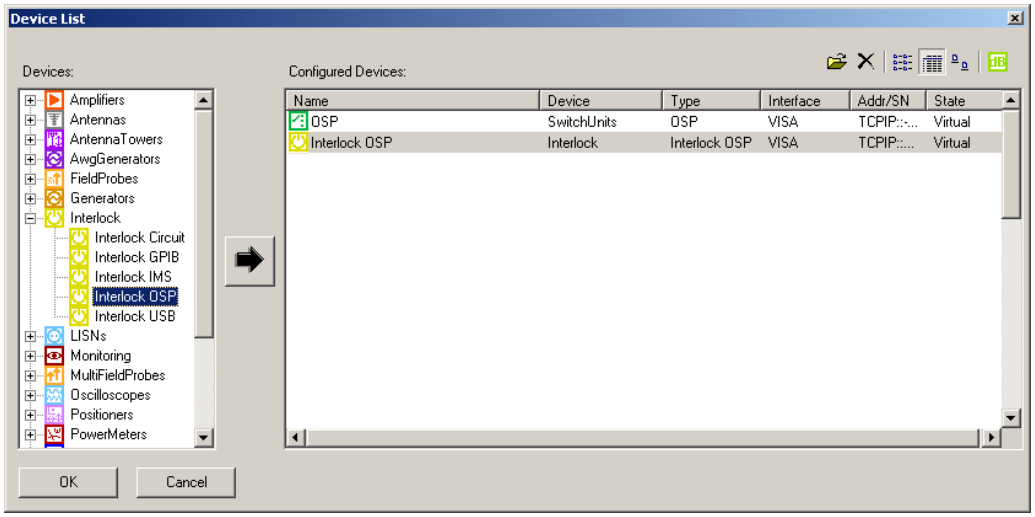

In the Device list which is shown in the left box, the device type Interlock and device Interlock OSP is selected.

When pressing this button, the device Interlock OSP is taken over into the R&S EMC32 device configuration and displayed in the box Configured Devices

By double-clicking the device Interlock OSP, the dialog for further configuration of the Device is opened. Please follow the same instructions as described in chapter 8.1.1 in order to define the interface settings.

Once the device is set to physical mode, the available modules are shown on the tab Properties.

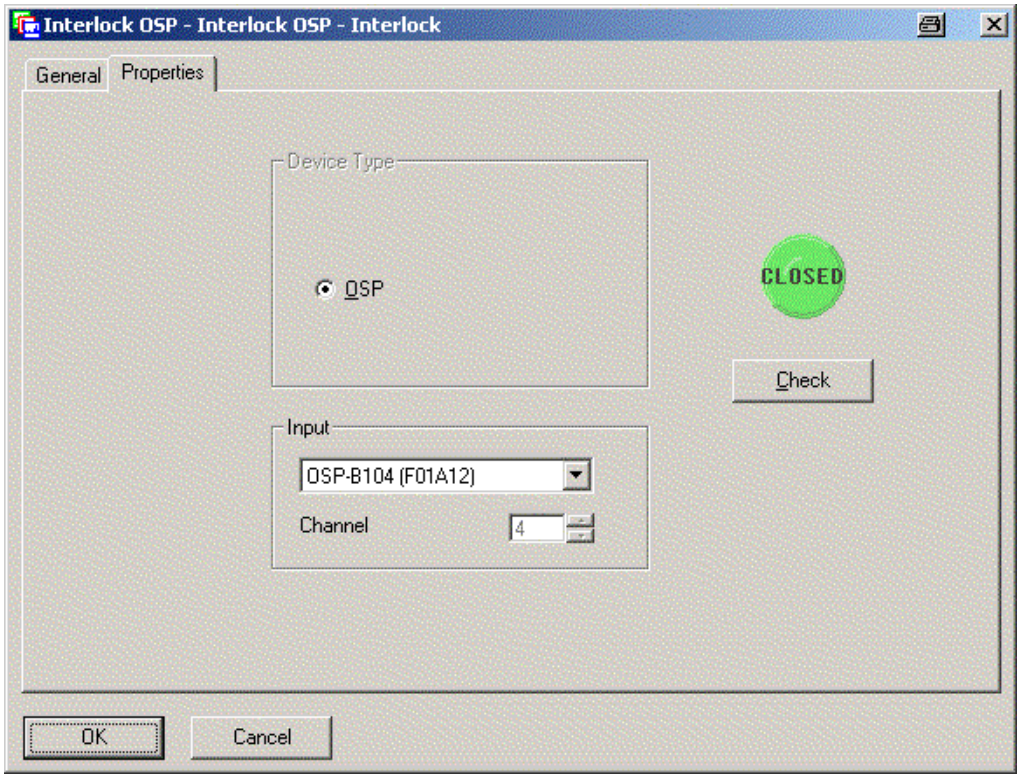

If the field Input gives you the choice to select one out of several modules of your R&S OSP, you may select the one where the interlock loop is connected to. If the R&S OSP is only equipped with one module, either R&S OSP-B103 or R&S OSP-B104, only this module can be selected.

If the selected module is an R&S OSP-B103, there is free choice of the channel to be used. Please select the channel as appropriate.

If the selected module is an R&S OSP-B104, there is a fixed relation to the input channel. In this case the field Channel has no meaning. See chapter 9.2.4 for the pinout at the connector.

Pressing the Check button will read the status of the interlock thus allowing you to verify that the correct selection has been made. The interlock status is shown as a green Closed or as a red Open indicator.

Press the OK button to store the actual property settings in R&S EMC32.

8.2 R&S OSP Drivers

For the R&S OSP a series of drivers is available like a driver for LabWindows/CVI, LabView and IVI. You can find them in the download area of the R&S homepage, as well as on the installation CD-ROM delivered together with the instrument.

The following dialogs are examples as found on the CD-ROM. Detailed information on the drivers is available in the related parts of the CD-ROM and in the drivers help utility.

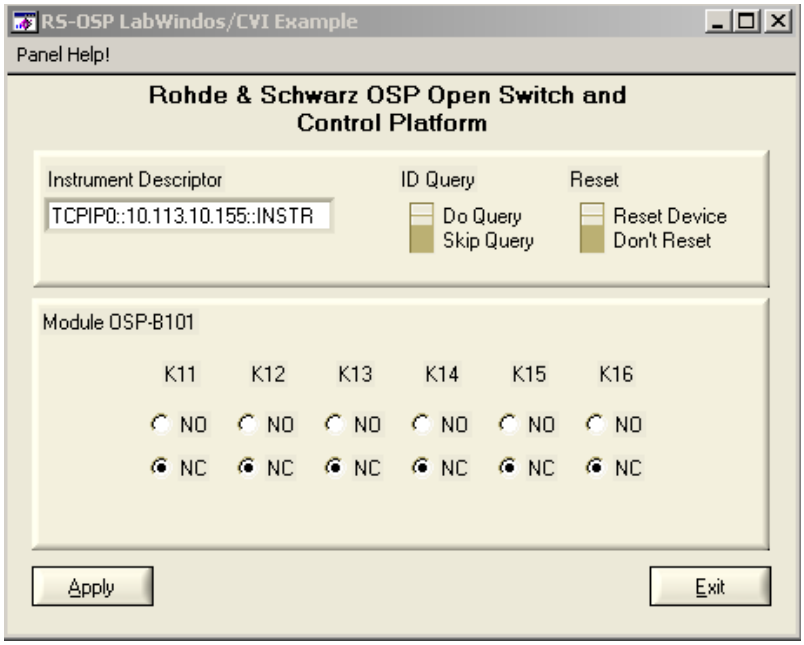

Figure 8-1: Example of LabWindows/CVI Driver

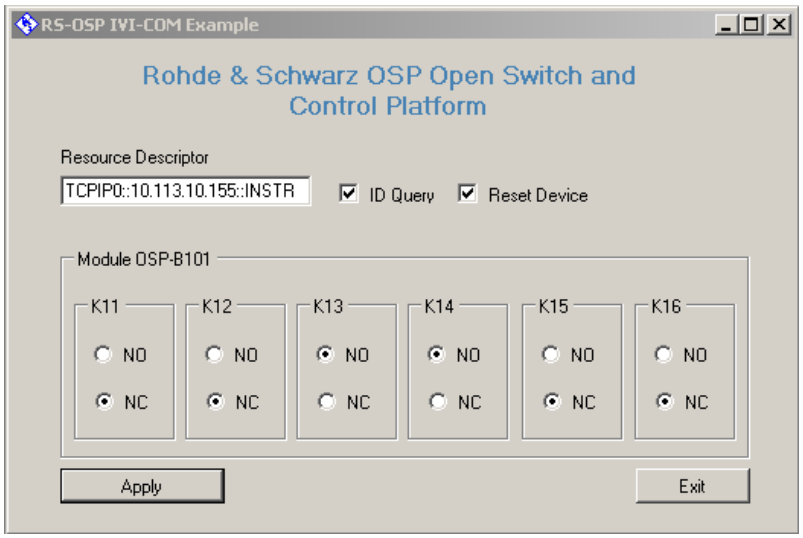

Figure 8-2: Example of IVI Driver

8.3 Extending the R&S OSP System

The R&S OSP120 provides five slots space, while the R&S OSP130 provides three slots, to configure up to three modules like the R&S OSP-B101, R&S OSP-B102 and R&S OSP-B103. If it is required to configure additional modules, the R&S OSP can be extended by connecting the R&S OSP150.

8.3.1 R&S OSP150 Extension Unit

The R&S OSP150 Extension Unit is almost identical to the R&S OSP120 with the difference, that this unit has no LAN connection but a CAN bus interface which is connected to the R&S OSP120 or R&S OSP130. The R&S OSP150 is controlled from the R&S OSP120 or R&S OSP130.

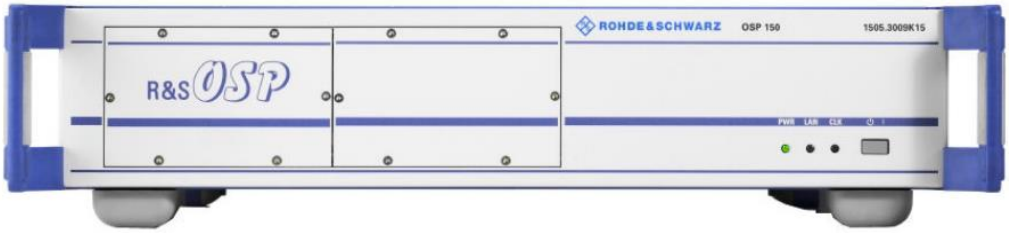

The R&S OSP150 offers another five slots, with three of them being active slots, to take further modules like the R&S OSP-B101, R&S OSP-B102 and R&S OSP-B103.

R&S OSP150 Extension Unit

Up to four R&S OSP150 Extension Units can be cascaded in one R&S OSP system.

8.3.2 Connecting the R&S OSP150

8.3.2.1 Connection with Copper Cables

The R&S OSP150 is connected to the R&S OSP120 via CAN bus. For the CAN connection, the following cables are available as accessories:

R&S OSP-Z101	CAN-BUS CABLE 0,5M
R&S OSP-Z102	CAN-BUS CABLE 5 M
R&S OSP-Z103	CAN-BUS Y CABLE 0,5M

To connect two instruments, i.e. R&S OSP120 or R&S OSP130 and R&S OSP150, either the cable R&S OSP-Z101 or R&S OSP-Z102 (different cable length) is used. See following setup.

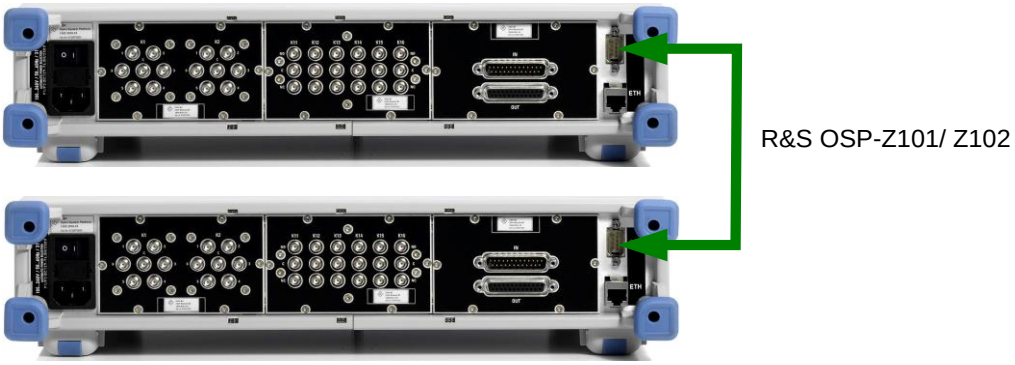

If more than one R&S OSP150 is to be connected to the R&S OSP120 or R&S OSP130, the cable R&S OSP-Z103 is used. This cable is a Y-type cable and allows to loop the CAN bus to further extension units R&S OSP150.

8.3.2.2 Connection with Fiber-Optic Cables

For larger distances between both OSP units or if the R&S OSP150 is operated inside an anechoic chamber with the R&S OSP120 or R&S OSP130 placed outside the chamber, a fiber-optic connection can be used. The fiber-optic connection with suitable fiber-optic feed-through connectors ensures that the shielding effectiveness of the chamber is maintained.

The fiber-optic connection is a transparent extension of the CAN bus. Two converters are required to transform the CAN bus signal from electrical to optical and vice versa.

Standard off-the-shelf equipment can be used for the fiber optic link. Contact your R&S representative for further information or recommendation.

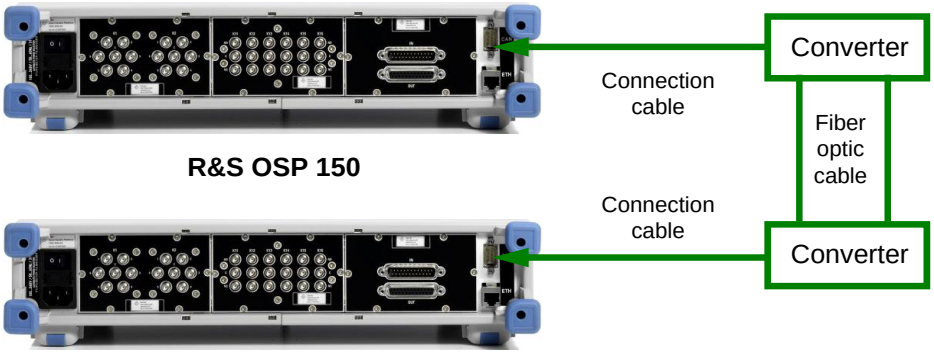

R&S OSP 150

R&S OSP 120

The fiber-optic extenders can be supplied with DC power from the R&S OSP devices via the CAN bus connectors and appropriate connection cable.

See chapter ‘Rear Panel Connectors’ for details on the CAN bus connector pinout.

8.3.3 How to Register the R&S OSP150

Assume you have connected one R&S OSP150 to your R&S OSP120. When starting for the first time, it is required to register the configuration on the R&S OSP120. In order to do so, first the R&S OSP120 has to be registered, as described in chapter 3.3.2. Then, in a second step, the R&S OSP150 has to be registered on frame F02 with the address 5xxxxxx where xxxxxx is the serial number of the R&S OSP150.

If there are more cascaded R&S OSP150 units, use the frame numbers F03 and higher for registration.

8.4 Application of Module R&S OSP-B103

The module R&S OSP-B103 with 16 input/output ports can be used to connect additional relays to the R&S OSP.

The following application applies to EMI systems measuring the Radiated Spurious Emission of mobile phones and other equipment. These EMI systems need a series of notch filters to be switched during the measurement. Depending on the design of the system and due to the size of the notch filters, the relays are mounted close to the notch filters to keep the cable loss low. The module R&S OSP-B103 can be used to control these “remote relays” via the R&S OSP. The following chapter gives an example for such a solution.

The below example is shown for a maximum configuration. Check the R&S OSP-B103 version for maximum output current!

8.4.1 Controlling External Relays with R&S OSP-B103

The module R&S OSP-B103 has 16 output lines and 28 V DC power supply. The output lines are open drain type and are switched to GND when activated.

The following table gives a short specification and recommendation of the preferred relay type to be used with the R&S OSP-B103.

Switch type	Max. Freq.	Coil voltage / current	Relay type	Recommended
SPDT	18 GHz	24 .. 28 V DC / max 200 mA	failsafe	Radiall 570 413 000
SP6T	18 GHz	24 .. 28 V DC / max 200 mA (positive common terminal)	failsafe	Radiall 583 403 200
SPDT	40 GHz	24 .. 28 V DC / max 200 mA	failsafe	Radiall 571 813 200
SP6T	40 GHz	24 .. 28 V DC / max 200 mA (positive common terminal)	failsafe	Radiall 573 803 610

The connection of the relays is done as shown in the block diagram below.

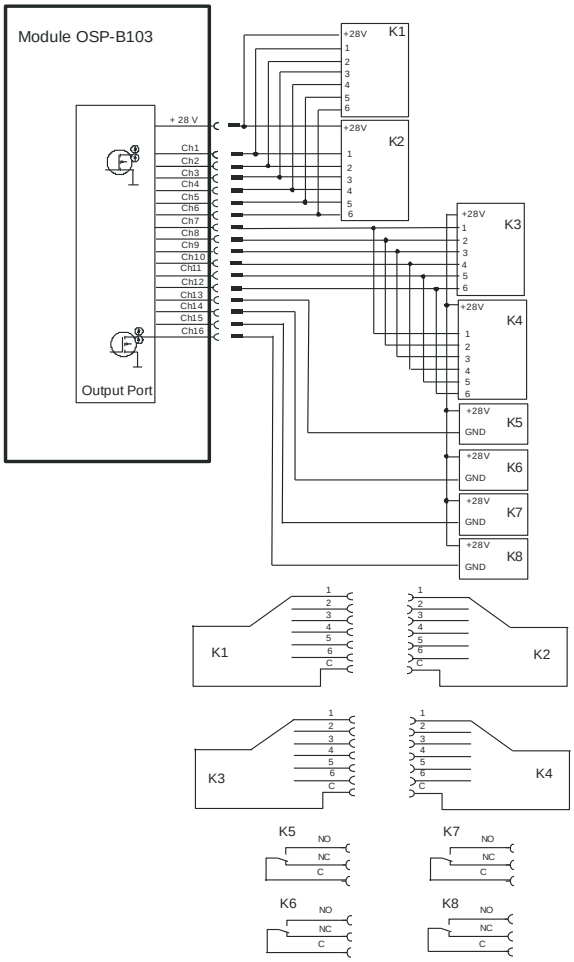

R&S OSP-B103 current consumption

Usually each slot for the R&S OSP modules is capable to deliver a nominal current 600 mA for the R&S OSP module.

The R&S OSP is able to supply a nominal current of 800 mA for the module R&S OSP-B103 if at least one slot in the R&S OSP is fitted with the module R&S OSP-B102 which requires less current.

The relay switching is defined via the OSP Panel, controlling the R&S OSP-B103 module and defining path configuration. See chapter 3.3 for further information.

CAUTION

Risk of mismatch with SP6T relay

It is in the responsibility of the user to take care that the SP6T switches always are set to one single terminal at the same time.

Not observing this rule will lead to mismatch in the RF path!

For the above example, the following relay positions shall be set:

Relay No.	Position
K1 / K2	1
K3 / K4	1
K7	NO
K8	NO

Via the OSP Panel a path configuration with the name “Path-1” is to be created. The following steps are necessary:

1. Start the OSP Panel, select module R&S OSP-B103 and set the required output lines. To set relay K1/K2 and K3/K4 to position 1, the output lines Ch1 and Ch7 have to be set. For K7 and K8 in NO position, the outputs Ch15 and Ch16 are to be set. In order to take over the setting for the R&S OSP-B103 outputs into the path configuration, the buttons for Ch1, Ch7, Ch15 and Ch16 must be selected as well; they are switched to green. See below dialog as example.

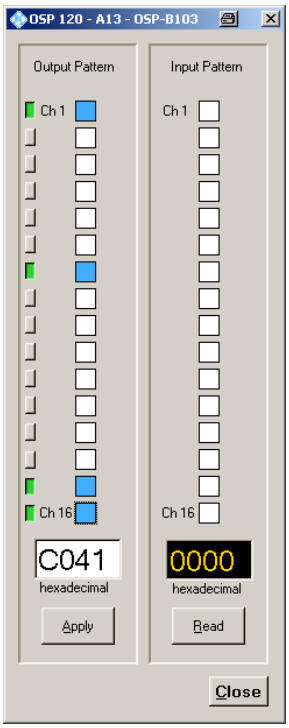

2. Select the utility >Path >Save Path … in the OSP Panel, Press the button Save and enter the required name “Path-1”. The path now is stored in the R&S OSP flash memory. Press Close to exit the dialog.

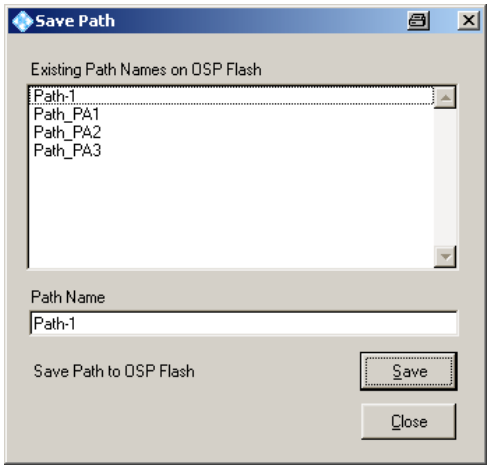

3. The path “Path-1” now can be set via the OSP Panel and selecting the utility **>Path >Switch Path** … or via remote control (for example with EMC32 software) by calling the path name Path-1. See chapter 8.1 for details on the EMC32 and R&S OSP.

8.4.2 Input Ports of R&S OSP-B103

The input ports of the module R&S OSP-B103 are designed for LVC (Low Voltage CMOS) logic but can be operated with TTL level up to 5 V as well.
Control circuits like the interlock loop as it is used for EMS systems, often make use of control voltages up to 28 V DC. It is possible to connect the R&S OSP-B103 input to circuits with up to 28 V when the following points are observed.
The input lines of the R&S OSP-B103 must be connected with a resistor in series if voltages > 5 V and ≤ 28 V DC are applied.

CAUTION

Risk of module damage

The maximum voltage to be directly applied to the module R&S OSP-B103 input lines is TTL level. For voltages up to 28 V DC, a resistor has to be used in series with a minimum of 22 kΩ

An example for the R&S OSP-B103 input connection with 28 V DC is shown in the below block diagram.

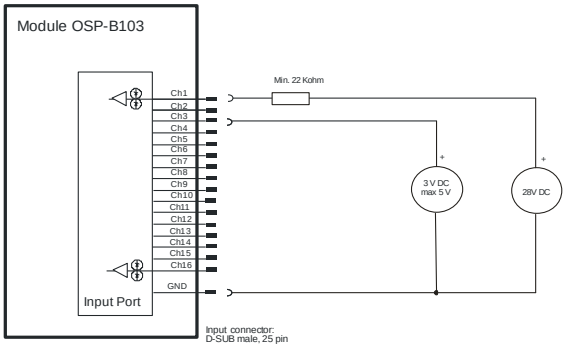

8.4.3 Output Ports of R&S OSP-B103

The output ports of the module R&S OSP-B103 are designed as FET driver switching to GND when activated. Each output is protected with diode against transients which may occur when switching inductive loads such as relay coils.

Each output port can draw a maximum of 200 mA. The current draw of all 16 output ports of the R&S OSP-B104 module is limited to a maximum of 800 mA.

R&S OSP-B103 current consumption

The R&S OSP is able to supply a nominal current of 800 mA for the module R&S OSP-B103. But the total current for all three slots in the R&S OSP is limited to 2 A.

8.5 Application of Module R&S OSP-B104

The use of the module R&S OSP-B104 with its input/output ports for special use in EMS systems is described in this chapter. The use extends to the following properties:

- Control of up to four high power RF relays
- Monitoring of an interlock loop making use of door switches and these power relays
- Relaying the interlock status to any connected power amplifier
- Ancillary four input port lines and five output port lines for arbitrary use

8.5.1 Controlling External Power Relays with R&S OSP-B104

The module R&S OSP-B104 has four connectors to control power relays.
There are two models of Spinner relays supported by this module.
The following table gives a short specification of the preferred relay type to be used with the R&S OSP-B104.

Switch type	Max. Freq.	RF connector	Operating voltage	Power rating	Type
DPDT	2 GHz	4 × 1 ⅝” EIA	230 V AC	7 kW at 1 GHz	Spinner BN 64 00 75
DPDT	5 GHz	4 × 7-16 female	24 V DC	2 kW at 1 GHz	Spinner BN 51 26 70

Other switches may be used if they are compatible to the output specifications of the control lines. See the R&S OSP datasheet for details.
The connection of the relays of type BN 64 00 75 is done as shown in the block diagram below.

Please note that in the connecting cable or rather in the corresponding connector the bridges between pins 8 and 9 on the R&S OSP-B104 side and between pins (1, 2 and 17) and (21 and 24) on the switch side need to be supplied.

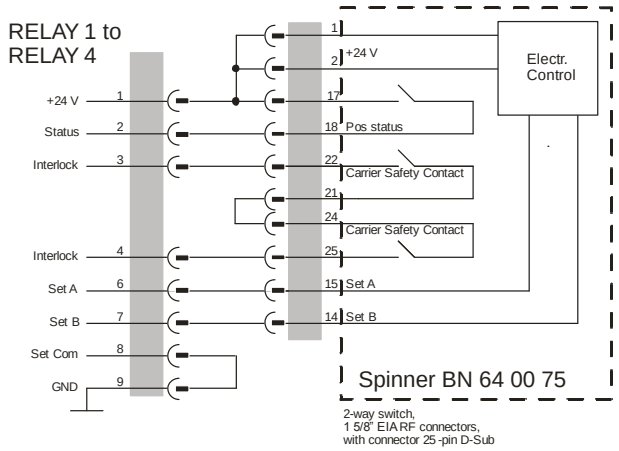

Figure 8-3: Connecting Diagram for BN 64 00 75 to R&S OSP-B104

The connection of the relays of type BN 51 26 70 is done as shown in the block diagram below.

Please note that in the connecting cable or rather in the corresponding connector the bridges between pins 8 and 9 on the R&S OSP-B104 side and between pins (1 and 20) and (27 and 29) on the switch side need to be supplied.

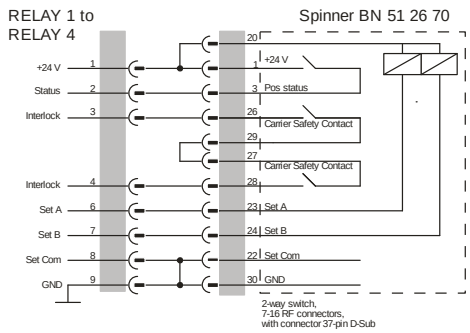

Figure 8-4: Connecting Diagram for BN 51 26 70 to R&S OSP-B104

8.5.2 Interlock Monitoring with the R&S OSP-B104

Interlock monitoring with the module R&S OSP-B104 serves two purposes:

- Detect an open interlock circuit and inform the application software
- Relay this information to power amplifiers for deactivating their RF output

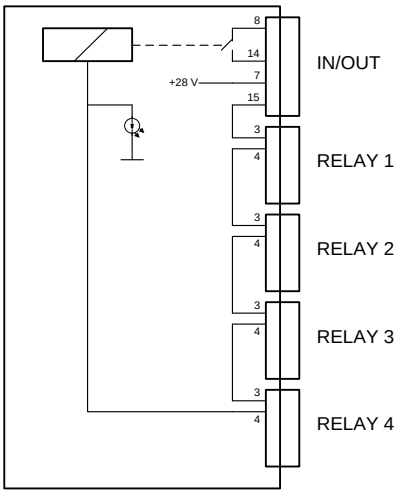

Figure 8-5: Interlock Monitoring with Module R&S OSP-B104

The above figure indicates the internal wiring for a full interlock loop. On the IN / OUT connector the pins 7 to 15 have to be connected to door switches, and on each of the RELAY connectors pins 3 and 4 connect to the carrier safety contacts of the relay. While a relay is turning, the connection between these two pins is interrupted thus opening the interlock loop.

If no relay is connected on any of these four connectors, supply a dummy bridge connector containing a connection between pin 3 and 4. Not doing so will make the interlock functionality not work.

If the interlock is closed, also the pins 8 and 14 of the IN / OUT connector are bridged by an internal relay. This allows to route this line to a power amplifier's interlock input thus removing RF power in case of a door which is opened, or of a power relay not being in its safe position.
See chapter 8.1.4 for details on the interlock handling in EMC32.

8.5.3 Input Ports of R&S OSP-B104

The input ports of the module R&S OSP-B104 are designed for LVC (Low Voltage CMOS) logic but can be operated with TTL level up to 5 V as well.
Control circuits like the interlock loop as it is used for EMS systems, often make use of control voltages up to 28 V DC. It is possible to connect the R&S OSP-B104 input to circuits with up to 28 V when the following points are observed.
The input lines of the R&S OSP-B104 must be connected with a resistor in series if voltages > 5 V and ≤ 28 V DC are applied.

CAUTION

Risk of module damage

The maximum voltage to be directly applied to the module R&S OSP-B104 input lines is TTL level. For voltages up to 28 V DC, a resistor has to be used in series with a minimum of 22 kΩ.

For more details, see drawing in chapter 8.4.2.

8.5.4 Output Ports of R&S OSP-B104

The output ports of the module R&S OSP-B104 are designed as FET driver switching to GND when activated. Each output is protected with diode against transients which may occur when switching inductive loads such as relay coils.

Each output port can draw a maximum of 200 mA. The current draw of all four output ports of the R&S OSP-B104 module is limited to a maximum of 800 mA.

R&S OSP-B104 current consumption

The R&S OSP is able to supply a nominal current of 800 mA for the module R&S OSP-B114. But the total current for all three slots in the R&S OSP is limited to 2 A.

One application for the use of the output ports is to switch on a lamp while an EMS measurement is made. The lamp might illuminate a sign “Test in progress”. If the lamp is an ordinary 230 V lamp, an additional relay is required in order to switch the mains voltage.

8.6 Application of Module R&S OSP-B114

The module R&S OSP-B114 is desiged for applications in small or medium systems for Electromagnetic Susceptibility (EMS). The module fulfills the following tasks:

- Switching of the output of two power amplifiers to one or two transmit antennas (or other kind of transducers).
- Providing the circuitry for an interlock loop with the following functions:
  - monitoring a interlock loop and read/display the actual status
  - power down external amplifiers depending on interlock status
  - disconnect the signal generator from power amplifier (if amplifier cannot be powered down) depending on interlock status
- Four output lines. Can be used for example to control the polarization of the transmitting antennas
- Four input lines

Together with other switching modules out of the R&S OSP family, the complete switching for a system can be realized as shown in the below example.

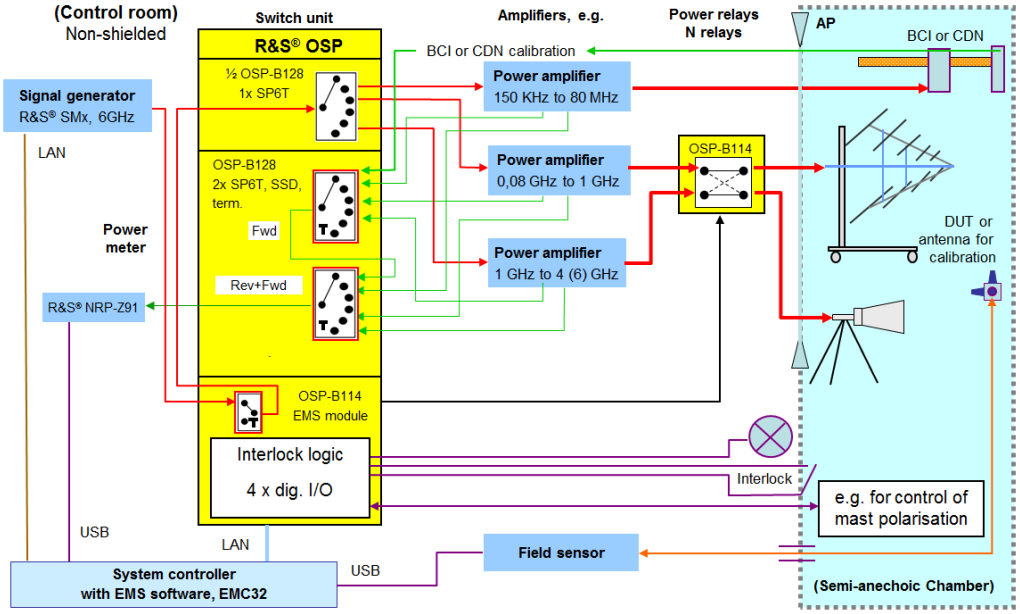

Figure 8-6: Example for an EMS Tests system setup with Module R&S OSP-B114

The above example is setup for Conducted and Radiated Tests with the following features:

Signal Generator:	one which can be switched to one of the three power amplifiers
Power amplifiers:	one for Conducted and two for radiated tests
Transducers:	- BCI (Bulk Current Injection) Clamp or CDN (Coupling/ Decoupling Network for Conducted Tests - two Antennas for Radiated Tests
Power Meter:	- can be switched to monitor forward/reverse power of one of the three amplifiers - or for calibration monitor the door contact of the Anechoic Chamber and switch the power amplifier to Standby with door open.
Interlock:	The Interlock Status can be shown (for example at the Rack front side)
Polarisation:	with suitable pneumatic interface the R&S OSP-B114 output ports can be used for remote control of antenna polarisation

8.6.1 Switching a Signal Generator via the R&S OSP-B114 module

The module R&S OSP-B114 has one terminated solid state SPDT relay with SMA connectors. This relay can be looped into the path Signal Generator to Power Amplifier.

R&S OSP-B114 signal generator switching

This function only is used if the used Power Amplifiers have no Interlock Security Loop as described in the next chapter.

The relay is controlled by the Interlock loop. In case the interlock loop is open, the relay is inactive and the signal generator is separated from the Power Amplifier input. The Power Amplifier input itself is terminated by 50 ohms via the relay. See attached diagram for details.

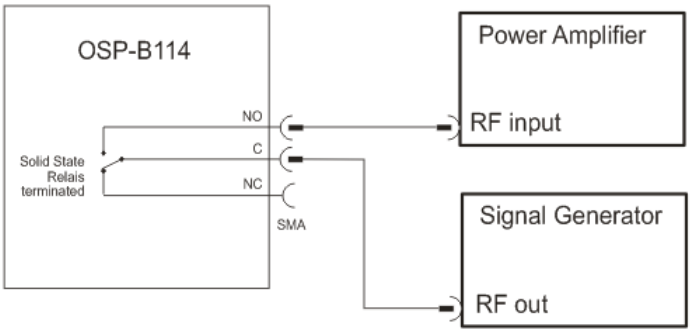

Figure 8-7: Switching of Signal Generator with Module R&S OSP-B114

8.6.2 Interlock Circuitry with the R&S OSP-B114 Module

To setup an EMS system with Interlock functionality, the module R&S OSP-B114 offers the following features:

Interlock Loop:
Between Pin 6 (+ 28V) and Pin 2 (INTLK Loop) of the 9-Pin Sub-D connector IN a loop is wired which contains a door contact. If the door is closed, the Interlock loop is closed and Power Amplifiers can be operated.

Interlock Output:
There are two floating contacts which are closed with Interlock Loop closed. These contacts are connected to the Power Amplifiers. Most of the Power Amplifiers have got aa Interlock Safety Loop: two contacts have to be bridged to allow the Power amplifier to be switeched to Operate Mode.

Interlock LED:
The INTLK LED on the OSP-B114 front panel is OFF as long as the Interlock Loop is closed. As soon as the Interlock Loop is opened, the LED is switched ON (red light). There is a possibility to connect an external LED (low power LED with about 10 mA current) on of the 9-Pin Sub-D connector OUT according to the following diagram. The resistor for LED current limitation is part of the R&S OSP-B114 module.

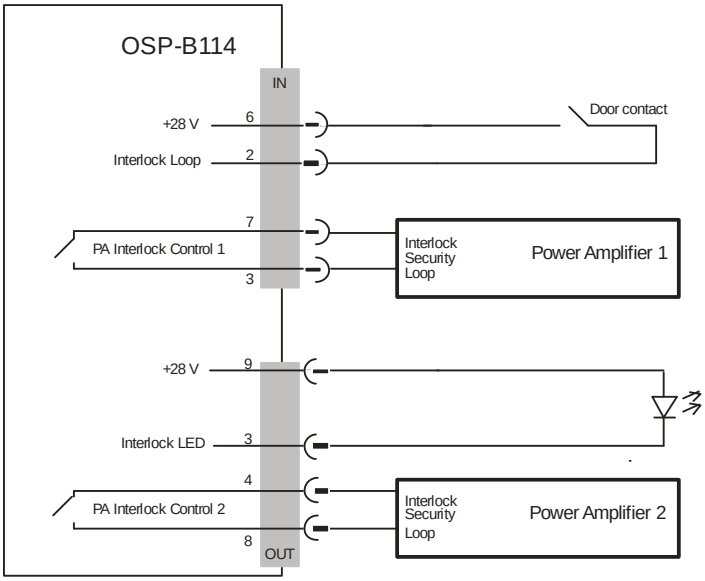

Figure 8-8 Interlock wiring with Module R&S OSP-B114

8.6.3 I/O Ports on the R&S OSP-B114 Module

The module R&S OSP-B114 offers four Input / Output ports which can be used for any customer application. In the following a proposal for remote control of antenna polarisation.

Input ports:
The input ports of the module R&S OSP-B114 are designed for LVC (Low Voltage CMOS) logic but can be operated with TTL level up to 5 V as well.
Control circuits like the interlock loop as it is used for EMS systems, often make use of control voltages up to 28 V DC. It is possible to connect the R&S OSP-B104 input to circuits with up to 28 V when the following points are observed.
The input lines of the R&S OSP-B104 must be connected with a resistor in series if voltages > 5 V and ≤ 28 V DC are applied.

CAUTION

Risk of module damage

The maximum voltage to be directly applied to the module R&S OSP-B114 input lines is TTL level. For voltages up to 28 V DC, a resistor has to be used in series with a minimum of 22 kΩ.

For more details, see the drawing in chapter 8.4.2

Output ports:
The output ports of the module R&S OSP-B114 are designed as FET driver switching to GND when activated. Each output is protected with diode against transients which may occur when switching inductive loads such as relay coils.

One output port can draw a maximum of 200 mA.

R&S OSP-B114 current consumption

The R&S OSP is able to supply a nominal current of 800 mA for the module R&S OSP-B114. But the total current for all three slots in the R&S OSP is limited to 2 A.

8.7 Application of Module R&S OSP-B158

8.7.1 Controlling active antennas with R&S OSP-B158

The module R&S OSP-B158 has 16 differential RS422 output lines and four independent DC-voltages.

Since RS422 is a symmetric signal transmission and is therefore very robust against incoming electromagnetic interference, this module features an appropriate interface to control and supply devices in harsh environment with large cable lengths.

Active monitoring and direction finding antennas fulfill this condition and are the preferred application for the R&S OSP-B158. The additional power supply port with different voltages supersedes an external power supply.

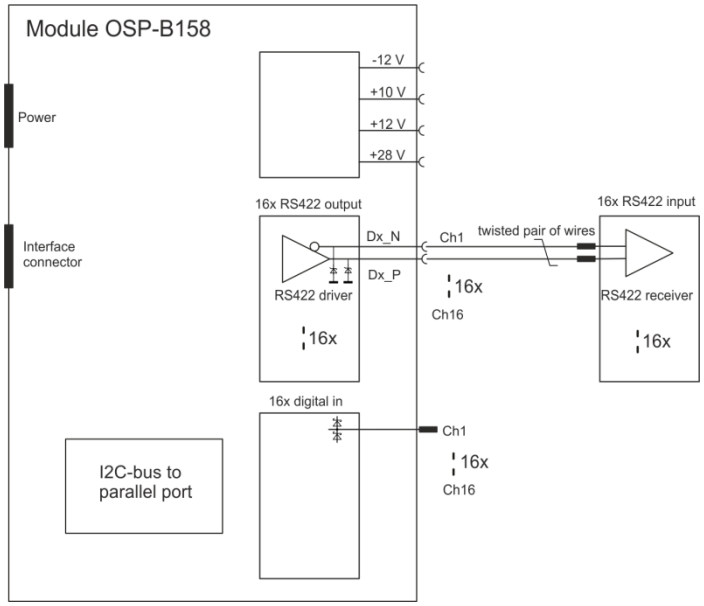

Figure 8-9: Block Diagram R&S OSP-B158 Application

9 Appendix

9.1 Interfaces and Connectors

This chapter provides a detailed description of the rear panel connectors of the R&S OSP. For a graphical overview of the rear panel refer to chapter 2, Preparing for Use.

The front panel is also described in that chapter.

9.1.1 Front Panel Connectors

9.1.1.1 USB

Double Universal Serial Bus connectors of type A (master USB), used to connect e.g. a keyboard or an external storage device (USB flash disk etc.).

The USB connectors comply with standard USB 2.0; refer to the "Specifications".

USB Connection

The length of passive connecting USB cables should not exceed 1 m. The maximum current per USB port is 500 mA.

9.1.1.2 DVI Interface

Optional DVI-D connector for external monitor connection; see Connecting a Monitor. This connector is not available on the R&S OSP130 and R&S OSP150.

9.1.2 Rear Panel Connectors

The following chapters describe the interfaces on the rear panel of the R&S OSP (see also chapter 2.4). The first part deals with the interfaces which are integral part of the R&S OSP device. The second part describes the interfaces of the modules which can be configured in the R&S OSP.

9.1.2.1 CAN Bus Connector

The CAN bus connector on rear side of the R&S OSP is used to connect the R&S OSP120 or R&S OSP130 with the extension unit R&S OSP150.

The CAN bus connector is placed in the upper right corner of the R&S OSP rear side. The connector type is D-Sub, 9-pin, female type.

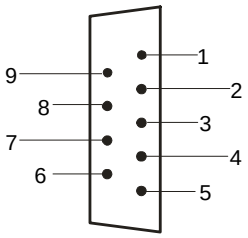

Figure 9-1: Pin Assignment CAN Bus Connector

Pin	Signal	Type	Remark
1	Not connected		
2	CAN-L	bi-directional	maximum 1 Mbit/s
3	GND		
4	Not connected		
5	Not connected		
6	Not connected		
7	CAN-H	bi-directional	maximum 1 Mbit/s
8	Not connected		
9	Power supply	output	12 V, max. 300 mA

CAN bus connection

When connecting equipment to the CAN bus interface like fiber-optic CAN bus converters, ensure that both devices support the same transfer rate.

Use the cable R&S OSP-Z106 to connect the R&S OSP device to the fiber-optic CAN bus converter.

Use the cables R&S OSP-Z101 or R&S OSP-Z102 to connect two R&S OSP devices. These cables do not connect the 12 V DC line of the CAN bus.

9.1.2.2 LAN REMOTE

8-pin connector RJ-45 used to connect the R&S OSP to a Local Area Network (LAN). Refer to Remote Operation in a LAN and LAN Interface. The pin assignment of the RJ-45 connector supports category 5 and 6 UTP/STP (Unshielded/Shielded Twisted Pair) cables.
This connector is not available on the R&S OSP150.

It is recommended to use double-shielded LAN cables of category 6 (SSTP).

9.1.3 LAN Interface

To be integrated in a LAN, the instrument is equipped with a LAN interface, consisting of a connector, a network interface card and protocols (VXI–11). For details on the connector and its use, refer to chapter 9.1.2.2. The network interface card supports IEEE 802.3 for a 10 MHz Ethernet and IEEE 802.3u for a 100 MHz Ethernet.

Instrument access via VXI-11 is usually achieved from high level programming platforms by using VISA as an intermediate abstraction layer. VISA encapsulates the low level VXI or even GPIB function calls and thus makes the transport interface transparent for the user. The necessary VISA library is installed when installing the OSP Panel.

9.1.3.1 VXI-11 Protocol

The VXI–11 standard is based on the RPC protocol which in turn relies on TCP/IP as the network/transport layer. The TCP/IP network protocol and the associated network services are pre-configured. TCP/IP ensures connection–oriented communication, where the order of the exchanged messages is adhered to and interrupted links are identified. With this protocol, messages cannot be lost.

Remote control of an instrument via a network is based on standardized protocols which follow the OSI reference model (see Fig. below).

Application	SCPI
Presentation	XDR (VXI-11)
Session	ONC-RPC
Transport	TCP/UDP
Network	IP
Data Link	Ethernet / 802.3
Physical	802.3 / 10BASE-T

Figure 9-2: Example for OSI Reference Model

Based on TCP/UDP, messages between the controller and the instrument are exchanged via open network computing (ONC) – remote procedure calls (RPC). With XDR (VXI–11), legal RPC messages are known as VXI–11 standard. Based on this standard, messages are exchanged between the controller and the instrument. The messages are identical with SCPI commands. They can be organized in four groups:

- Program messages (control command to the instrument)
- Response messages (values returned by the instrument)
- Service request (spontaneous queries of the instrument)
- Low–level control messages (interface messages)

A VXI–11 link between a controller and an instrument uses three channels: core, abort and interrupt channel. Instrument control is mainly performed on the core channel (program, response and low–level control messages). The abort channel is used for

immediate abort of the core channel; the interrupt channel transmits spontaneous service requests of the instrument. Link setup itself is very complex. For more details refer to the VXI–11 specification.

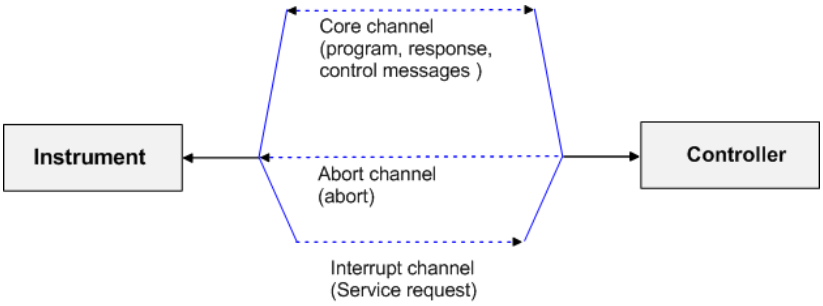

Figure 9-3: VXI–11 Channels between Instrument and Controller

The number of controllers that can address an instrument is practically unlimited in the network. In the instrument, the individual controllers are clearly distinguished. This distinction continues up to the application level in the controller, i.e. two applications on a computer are identified by the instrument as two different controllers.

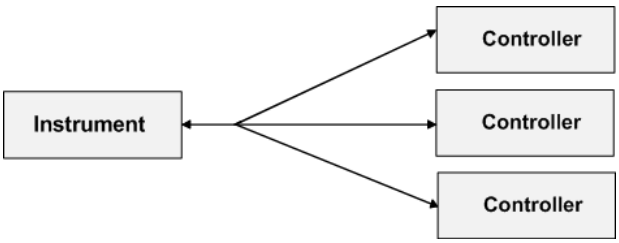

Figure 9-4: Remote control via LAN from Several Controllers

The controllers can lock and unlock the instrument for exclusive access. This governs access to the instrument from several controllers.

9.1.3.2 VXI-11 Interface Messages

On the Ethernet link, the interface messages are called low–level control messages. These messages can be used to emulate interface messages of the IEC/IEEE bus.

Command		Effect on the instrument
&ABO	(Abort)	Aborts processing of the commands just received.
&DCL	(Device Clear)	Aborts processing of the commands just received and sets the command processing software to a defined initial state. Does not change the instrument setting.
&GTL	(Go to Local)	Transition to the "Local" state (manual control).
&GTR	(Go to Remote)	Transition to the "Remote" state (remote control).
&GET	(Group Execute Trigger)	Triggers a previously active device function (e.g. a sweep). The effect of the command is the same as with that of a pulse at the external trigger signal input.
&LLO	(Local Lockout)	Disables switchover from remote control to manual control by means of the front panel keys.

Command		Effect on the instrument
&POL	(Serial Poll)	Starts a serial poll.
&NREN	(Not Remote Enable)	Enables switchover from remote control to manual control by means of the front panel keys.

9.2 R&S OSP Module Interfaces

The following chapters describes the interface of the available R&S OSP modules and particular precautions for connection, if required.

9.2.1 R&S OSP-B101/-B107/-B111/-B127 Interface

The module R&S OSP-B101 and others as listed above are single slot modules. They contain 6 SPDT relays which are directly accessible at the module's front panel. There are no additional RF cables inside the module.

Here is a picture of the R&S OSP-B101:

The following drawing shows the pinout. All RF connectors are SMA female type.

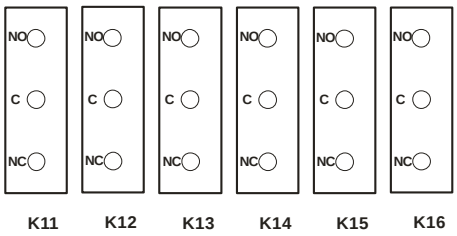

Figure 9-5: Layout RF Connectors of R&S OSP-B101

SMA Connectors

It is urgently recommended to use an SMA torque wrench (60 Ncm) to screw on and unscrew the RF connectors from the R&S OSP-B101 module.

The module description as given above applies to further options of the R&S OSP as far as the option has got a similar relay configuration. It will apply to the following modules:

Option	Relay configuration
R&S OSP-B107	6 x SPDT relay, solid state, 6 GHz
R&S OSP-B111	6 x SPDT relay, 40 GHz
R&S OSP-B127	6 x SPDT relay, solid state, terminated, 10 GHz

9.2.2 R&S OSP-B102/-B112 Interface

The module R&S OSP-B102 and others as listed above are single slot modules. They contain two SP6T relays which are directly accessible at the module's front panel. There are no additional RF cables inside the module.

Here is a picture of the R&S OSP-B102:

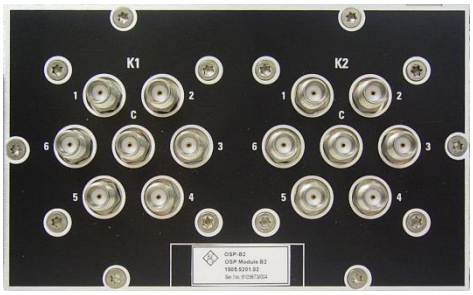

The following drawing shows the pinout. All RF connectors are SMA female type.

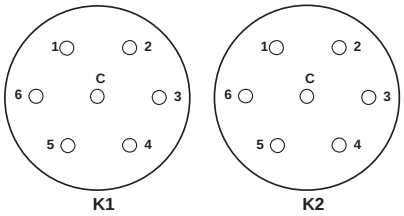

Figure 9-6: Layout RF Connectors of R&S OSP-B102

SMA Connectors

It is urgently recommended to use an SMA torque wrench (60 Ncm) to screw on and unscrew the RF connectors from the R&S OSP-B102 module.

The module description as given above applies to further options of the R&S OSP as far as the option has got a similar relay configuration. It will apply to the following modules:

Option	Relay configuration
R&S OSP-B112	2 x SP6T relay, 40 GHz

9.2.3 R&S OSP-B103 Interface

The module R&S OSP-B103 (single slot module) is an I/O module which contains a 16 bit input and a 16 bit output port. The ports are accessible at the module's front panel

via two connectors. The upper connector is the input, the lower one the output connector.

Here is a picture of the R&S OSP-B103:

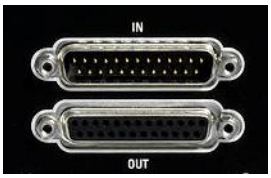

The connector type is D-Sub, 25 pin, male for input and female for output connector.

The pinout of both connectors is as shown below.

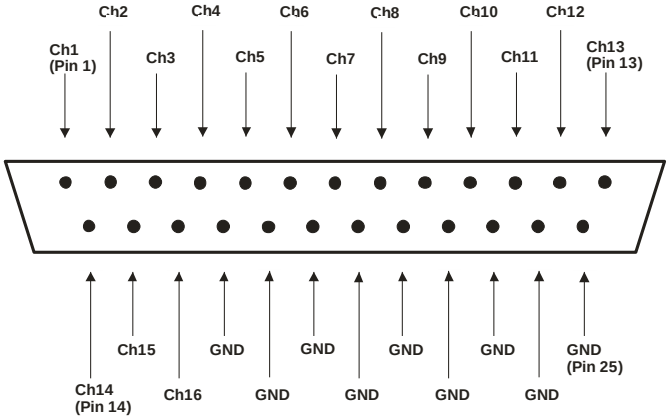

Figure 9-7: Pin Assignment R&S OSP-B103 Input

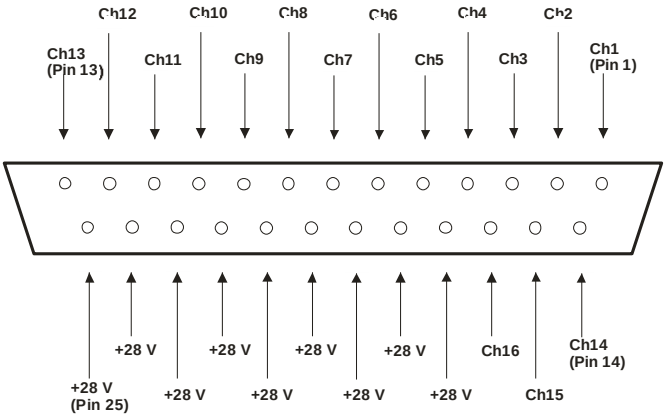

Figure 9-8: Pin Assignment R&S OSP-B103 Output

9.2.4 R&S OSP-B104 Interface

The module R&S OSP-B104 is a single slot module and is designed to control up to four power relays and contains also some other I/O ports. The application is intended to switch power relays up to 10 kW RF power, and to allow at the same time basic monitoring functions including interlock handling.
Here is a picture of the R&S OSP-B104:

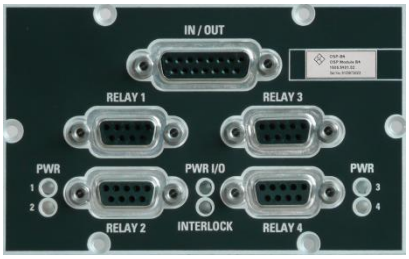

The connector type for controlling the power relays in the lower half is D-Sub, 9 pin, female. The upper connector type for the I/O-port is D-Sub, 15 pin, female.
The pinout of the relay control connectors is as shown below. See chapter 8.5.1 for more information on connecting power relays.

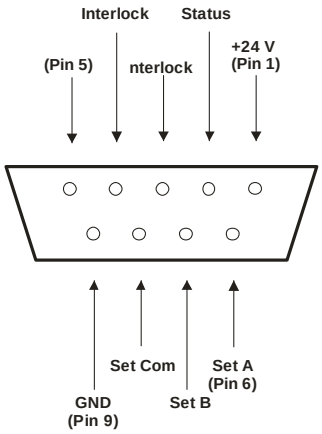

Figure 9-9: Pin Assignment R&S OSP-B104 Relay Control

If no relay is connected on any of these four connectors, supply a dummy bridge connector containing a connection between pin 3 and 4. Not doing so will make the interlock functionality not to work as intended.

The pinout of the IN / OUT connector is as shown below.

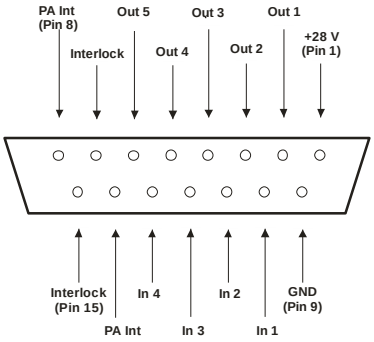

Figure 9-10: Pin Assignment R&S OSP-B104 Input/Output

9.2.5 R&S OSP-B108 Interface

The module R&S OSP-B108 is a single slot module and is designed to switch up to four DC contacts to one of six positions.
Here is a picture of the R&S OSP-B108:

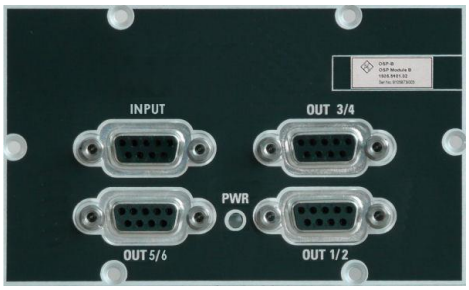

The connector type INPUT is male, all connector types OUT are D-Sub, 9 pin, female. The pinout of the INPUT connector is as shown below.

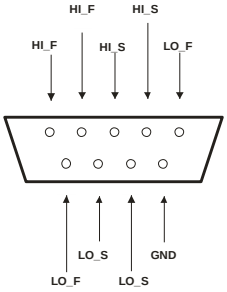

Figure 9-11: Pin Assignment R&S OSP-B108 INPUT

However the pin names intend functions like HI = positive pole, LO = negative pole, F = force, S = sense all pins are identical in ability of carrying current.

The pinout of the IN / OUT connector is as shown below. The 1 reflects all odd numbers of OUT 1,3,5 and the 2 reflects all even numbers of OUT 2,4,6

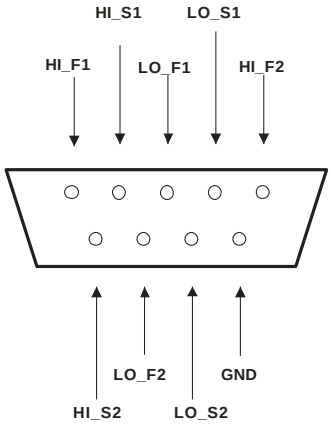

Figure 9-12: Pin Assignment R&S OSP-B108 Output

9.2.6 R&S OSP-B106 Interface

The module R&S OSP-B106 takes two slots in the R&S OSP. It contains 6 SPDT relays which are directly accessible at the module's front panel.

Three of the relays (K1 to K3) have N type connectors and are suited for frequencies up to 12 GHz. The other three (K4 to K6) have BNC connectors and may be used up to 900 MHz or for DC currents of up to 2 A. There are no additional RF cables inside the module.
Here is a picture of the R&S OSP-B106:

The following drawing shows the pinout.

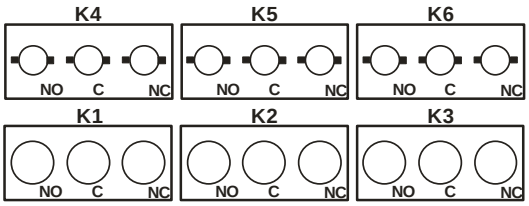

Figure 9-13: Layout RF Connectors of R&S OSP-B106

9.2.7 R&S OSP-B121 Interface

The module R&S OSP-B121 is a single slot module and contains 3 SPDT relays which are directly accessible at the module's front panel. There are no additional RF cables inside the module.

Here is a picture of the R&S OSP-B121:

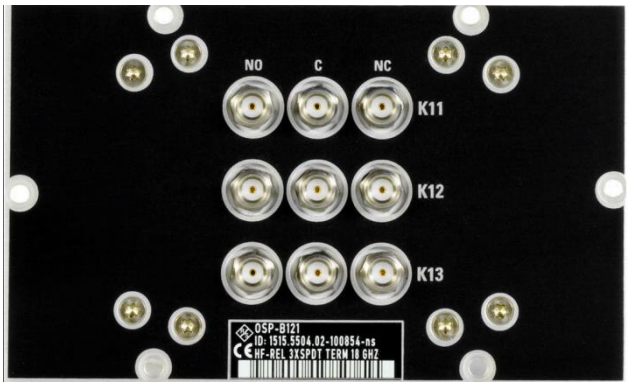

The following drawing shows the pinout. All RF connectors are SMA female type.

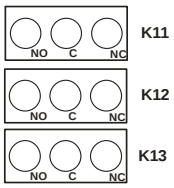

Figure 9-14: Layout RF Connectors of R&S OSP-B121

9.2.8 R&S OSP-B122 Interface

The module R&S OSP-B122 is a single slot module and contains one SP6T relay which is directly accessible at the module's front panel. There are no additional RF cables inside the module.
Here is a picture of the R&S OSP-B122:

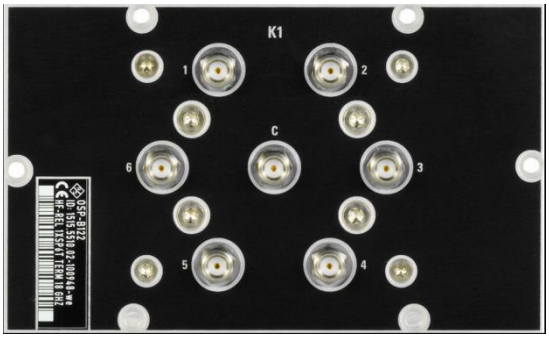

The following drawing shows the pinout. All RF connectors are SMA female type.

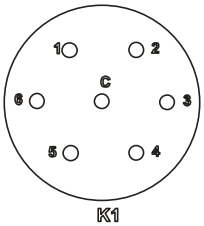

Figure 9-15: Layout RF Connectors of R&S OSP-B122

9.2.9 R&S OSP-B123 Interface

The module R&S OSP-B123 takes two slots in the R&S OSP. It contains 6 SPDT relays and one SP6T relay. All relays are directly accessible at the module's front panel. There are no additional RF cables inside the module.
Here is a picture of the R&S OSP-B123:

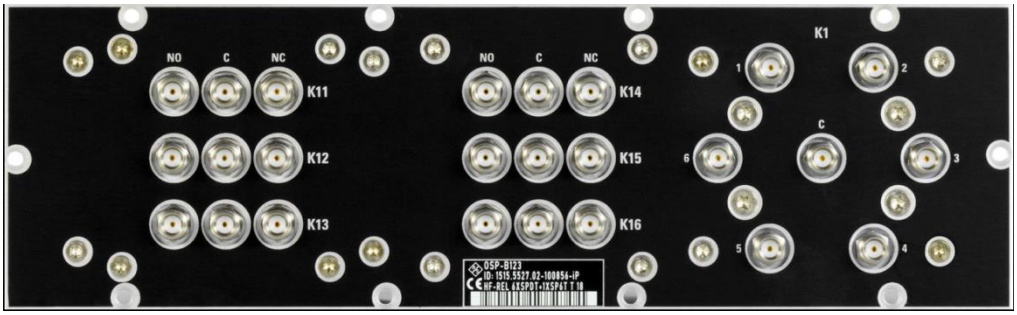

The following drawing shows the pinout. All RF connectors are SMA female type.

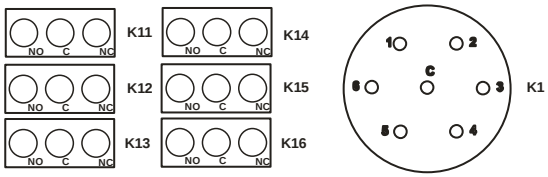

Figure 9-16: Layout RF Connectors of R&S OSP-B123

9.2.10 R&S OSP-B124 Interface

The module R&S OSP-B124 takes two slots in the R&S OSP. It contains 3 SPDT relays and two SP6T relays. All relays are directly accessible at the module's front panel. There are no additional RF cables inside the module.
Here is a picture of the R&S OSP-B124:

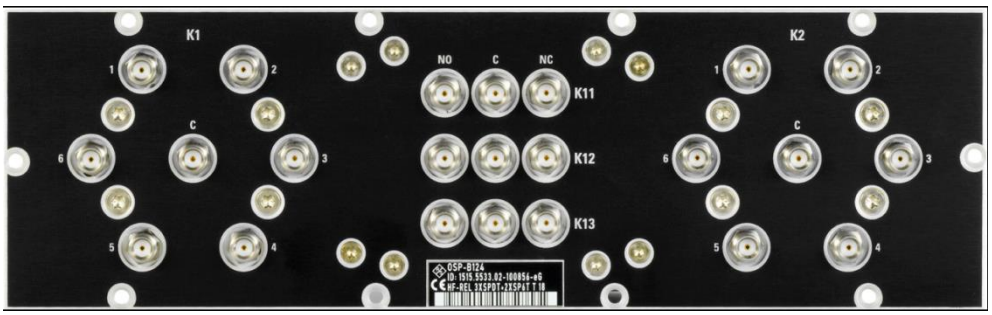

The following drawing shows the pinout. All RF connectors are SMA female type.

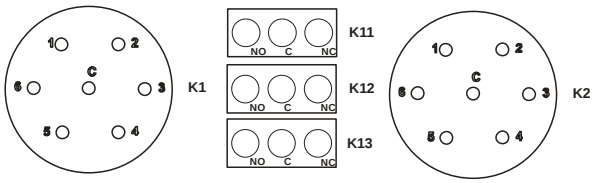

Figure 9-17 Layout RF Connectors of R&S OSP-B124

9.2.11 R&S OSP-B125 Interface

The module R&S OSP-B125 takes three slots in the R&S OSP. It contains 6 SPDT relays and three SP6T relays. All relays are directly accessible at the module's front panel. There are no additional RF cables inside the modules.
Here is a picture of the R&S OSP-B125:

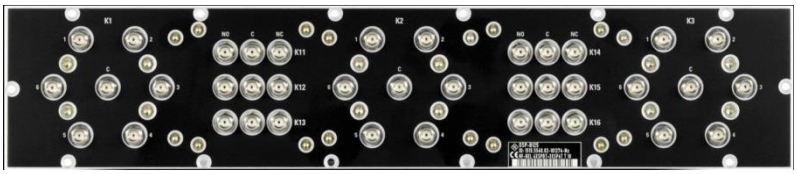

The following drawing shows the pinout. All RF connectors are SMA female type.

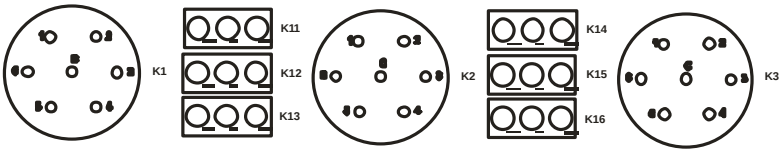

Figure 9-18: Layout RF Connectors of R&S OSP-B125

The R&S OSP-B125E and R&S OSP-B125H are very similar, but all RF connectors of the R&S OSP-B125E are **PC 3.5 mm** female type (DC to **26.5 GHz**), and all RF connectors of the R&S OSP-B125H are **PC 2.92** mm female type (DC to **40 GHz**).

The R&S OSP-B125H has additional externel termination for the 6 SPDT relays:

9.2.12 R&S OSP-B126 Interface

The module R&S OSP-B126 takes three slots in the R&S OSP. It contains three SP6T relays. All relays are directly accessible at the module's front panel. There are no additional RF cables inside the module.
Here is a picture of the R&S OSP-B126:

The following drawing shows the pinout. All RF connectors are SMA female type.

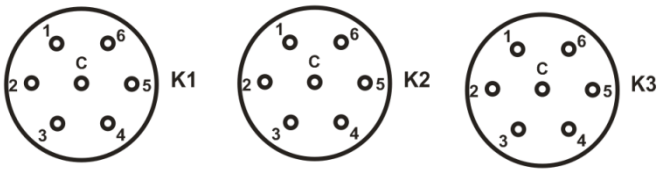

Figure 9-19: Layout RF Connectors of R&S OSP-B126

9.2.13 R&S OSP-B114 Interface

The module R&S OSP-B114 is a single slot module. It houses one DPDT switch with N-connectors and one SPDT relais with SMA connectors. All relays are directly accessible at the module's front panel. There are no additional RF cables inside the module.

The input and output ports are accessible via two connectors type D-Sub, 9 pin. The female connector type connector is for OUT, the male for IN.

The red LED INTLK shows the status of the interlock loop:

INTTLK LED ON: → Interlock loop open
INTLK LED OFF: → Interlock loop closed

Here is a picture of the R&S OSP-B114:

The following drawing shows the pinout.

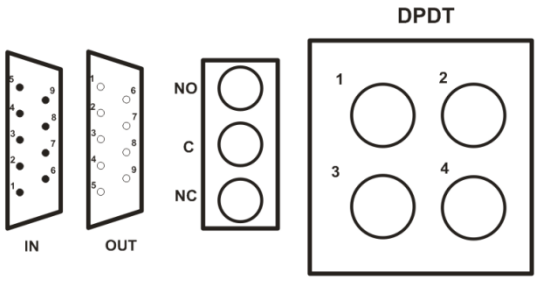

Figure 9-20: Layout the Connectors of R&S OSP-B114

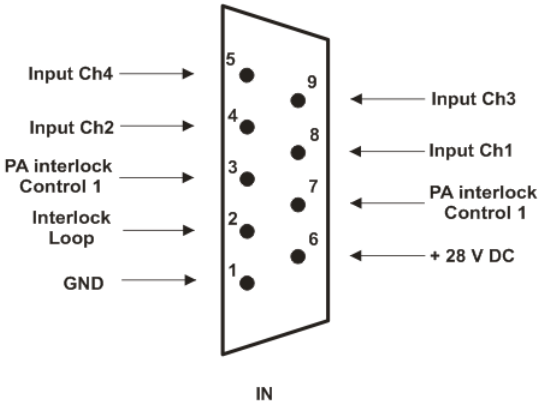

Figure 9-21: R&S OSP-B114 Connector IN Pin designation

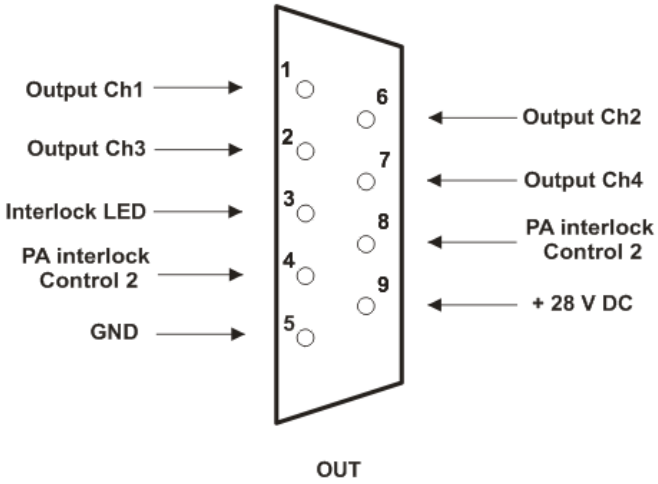

Figure 9-22: R&S OSP-B114 Connector OUT Pin designation

9.2.14 R&S OSP-B128 Interface

The module R&S OSP-B128 is a single slot module and contains up to 3 SP6T relays which are directly accessible at the module's front panel. There are no additional RF cables inside the module.
Here is a picture of the R&S OSP-B128:

The following drawing shows the pinout. All RF connectors are SMA female type.

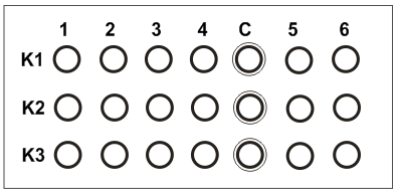

Figure 9-23: Layout RF Connectors of R&S OSP-B128

SMA Connectors

It is urgently recommended to use an SMA torque wrench (60 Ncm) to screw on and unscrew the RF connectors from the R&S OSP-B128 module.

9.2.15 R&S OSP-B131 Interface

The module R&S OSP-B131 contains 2 SPDT relays with N-type female connectors which are directly accessible at the module's front panel. There are no additional RF cables inside the module .
Here is a picture of the R&S OSP-B131:

The following drawing shows the pinout. All RF connectors are N type.

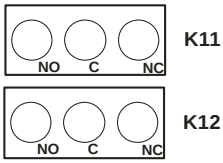

Figure 9-24: Layout RF Connectors of R&S OSP-B131

9.2.16 R&S OSP-B132 Interface

The module R&S OSP-B132 takes two slots in the R&S OSP. It contains 6 SPDT relays which are directly accessible at the module's front panel.

All the six relays have N type connectors and are suited for frequencies up to 12 GHz. There are no additional RF cables inside the module.
Here is a picture of the R&S OSP-B132:

The following drawing shows the pinout.

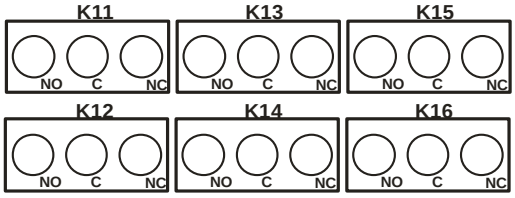

Figure 9-25 Layout RF Connectors of R&S OSP-B132

9.2.17 R&S OSP-B101L/-B111xL Interface

The single-slot modules R&S OSP-B101L, OSP-B111UL and OSP-B111VL contain a maximum of 6 SPDT relays in the latched version. The modules OSP-B111UL/VL also are available with 3 SPDT relays The relays are directly accessible at the module's front panel. There are no additional RF cables inside the module.

Here is a picture of the R&S OSP-B101L:

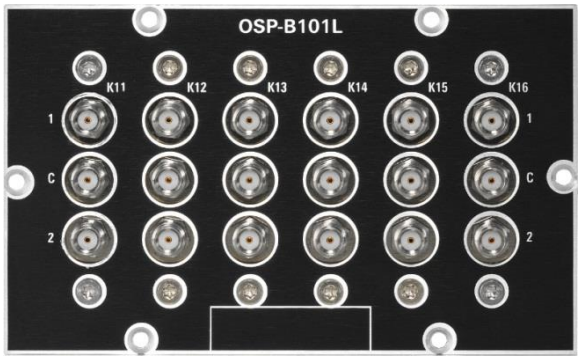

The following drawing shows the pinout. All RF connectors are SMA female type.

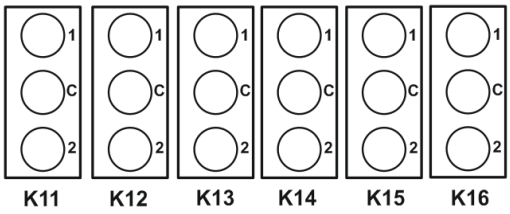

Figure 9-26: Layout RF Connectors of R&S OSP-B101L

SMA Connectors

It is urgently recommended to use an SMA torque wrench (60 Ncm) to screw on and unscrew the RF connectors from the R&S OSP-B101L module.

In comparison to the module R&S OSP-B101 with monostable relays, the R&S OSP-B101L/-B111xL relay ports are labelled with 1 and 2, since after power-off, the last relay condition is maintained. For more information, see chapter 5.2.16.

The below pictures show the R&S OSP-B101UL and OSP-B101VL:

OSP-B111UL and OSP-B111VL Connectors

Ensure that the correct connectors are used:

OSP-B111UL: 2.4 mm connectors
OSP-B111VL: 1.85 mm connectors

Use a torque wrench (90 Ncm) to screw on and unscrew the RF connectors.

9.2.18 R&S OSP-B129/-B119 Interface

The module R&S OSP-B129 takes one slot in the R&S OSP. It contains two SPDT relays and one terminated SP8T relay. The module R&S OSP-B119 houses two SPDT relays and one non-terminated SP8T relay

All relays are directly accessible at the module's front panel. There are no additional RF cables inside the module.
Here is a picture of the R&S OSP-B129:

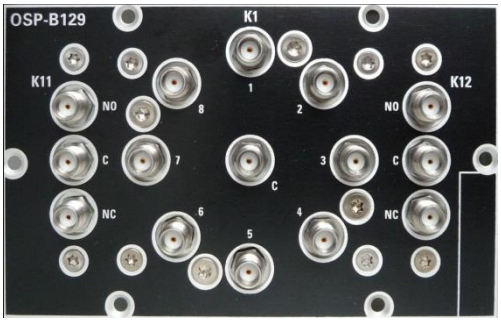

The following drawing shows the pinout. All RF connectors are SMA female type.

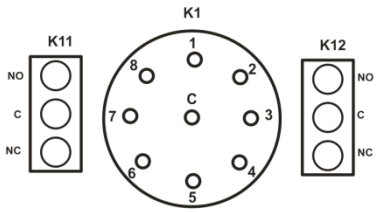

Figure 9-27: Layout RF Connectors of R&S OSP-B129/-B119

9.2.19 R&S OSP-B142 Interface

The module R&S OSP-B142 is a single slot module. It contains up to three SPDT relays or three DP3T relays. The relays are directly accessible at the module's front panel. There are no additional RF cables inside the module.

The variants .11, .12 and .13 are delivered with an external termination up to 30 dBm.

If higher power levels are required, the external termination needs to be connected via wire.

Here is a picture of the R&S OSP-B142 variant 03:

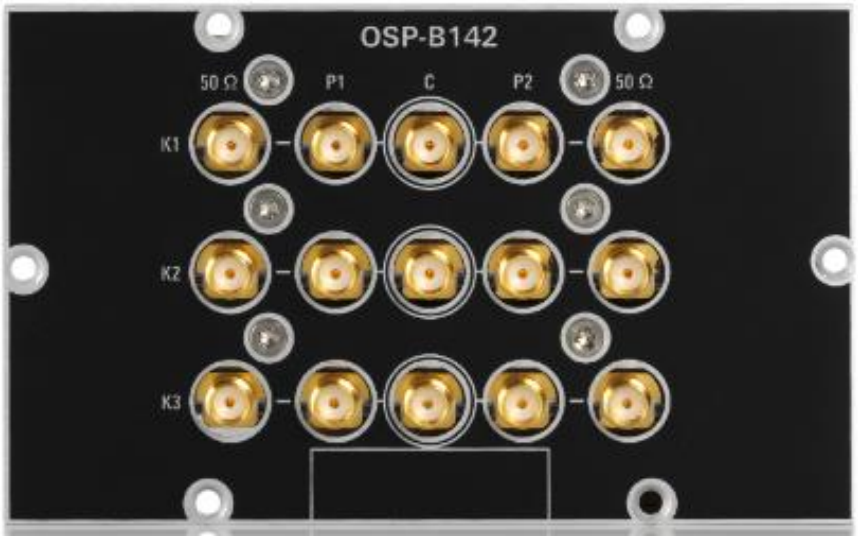

The following drawing shows the pinout. All RF connectors are SMA female type.

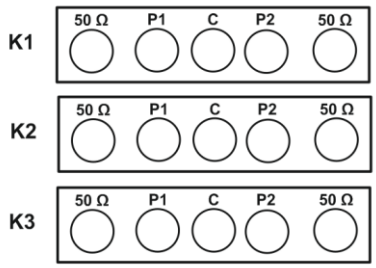

Figure 9-28: Layout RF Connectors of R&S OSP-B142

SMA Connectors

It is urgently recommended to use an SMA torque wrench (60 Ncm) to screw on and unscrew the RF connectors from the R&S OSP-B142 module.

9.2.20 R&S OSP-B149H Interface

The module R&S OSP-B149H is a single slot module. It contains one SP8T relay that is directly accessible at the module's front panel. There are no additional RF cables inside the module.

Here is a picture of the R&S OSP-B149H:

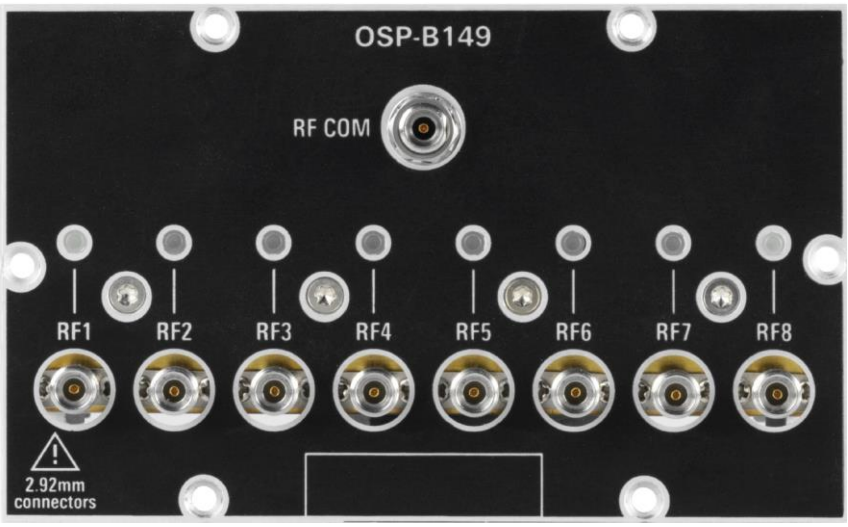

The following drawing shows the pinout. All RF connectors are PC 2.92 mm (K) female type.

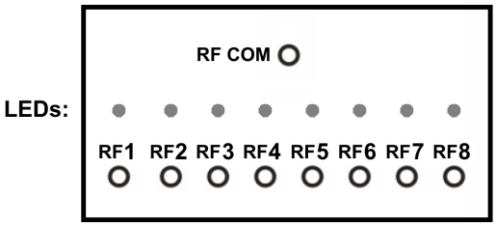

Figure 9-29: Layout RF Connectors of R&S OSP-B149H

PC 2.92 mm Connectors

It is urgently recommended to use a torque wrench (90 Ncm) to screw on and unscrew the RF connectors from the R&S OSP-B149H module.

9.2.21 R&S OSP-PM-I Interface

The module R&S OSP-PM-I takes one slot in the R&S OSP. It allows the integration of a Power Sensor of the family R&S NRP-Zxx. The Power Sensor is mounted on the modules base plate and directly connected to the modules N-type feed-through connector and USB adapter. There are no additional RF cables inside the module. Here is a picture of the R&S OSP-B129:

The following drawing shows the connectors available in the module R&S OSP-PM-I.

The RF feed-through connector is N female type. The USB Adapter is specific for R&S Power Sensors of the family NRP-Zxx. All these Power Sensors are equipped with Odumac connectors to fit into the USB adapter shown below.

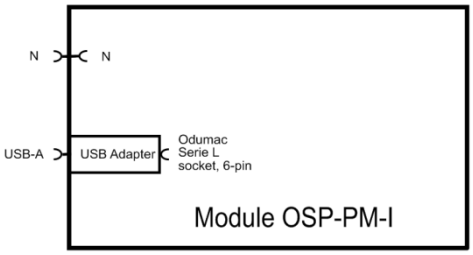

Figure 9-30: Layout Connectors of R&S OSP-PM-I

9.2.22 R&S OSP-B116/-B116H/-B136 Interface

The module R&S OSP-B116/-B116H and R&S OSP-B136 (each is a single slot module) is a RF switching module with two transfer switches (DPDT relays).

R&S OSP-B116 has got SMA-type female connectors, while the R&S OSP-B116H has PC 2.92 mm female connectors, ranging up to 40 GHz. The R&S OSP-B136 is equipped with N-type female connectors. The relay connectors are directly accessible at the module's front panel. There are no additional RF cables inside the module . Here is a picture of the R&S OSP-B116 and R&S OSP-B136:

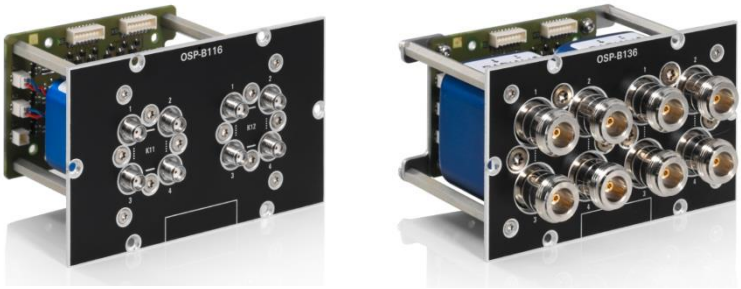

The following drawing shows the pinout.

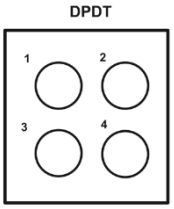

Figure 9-31: Layout Connectors of R&S OSP-B116 and R&S OSP-B136

9.2.23 R&S OSP-B158 Interface

The module R&S OSP-B158 (single slot module) is an I/O and supply module which contains a 16 bit input, a 16 bit differential RS422 output and a power supply port.

Here is a picture of the R&S OSP-B158:

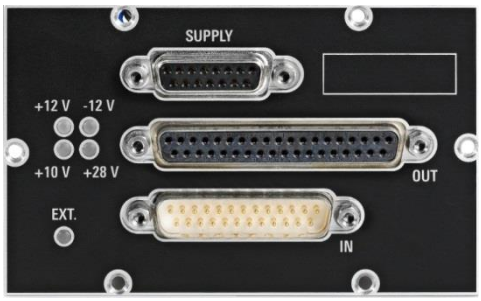

The upper connector is the power supply, the middle one the output and the lower one the input connector. The connector type is D-Sub, female for the supply and output connector, male for the input connector.

The pin-out for all connectors is as shown below.

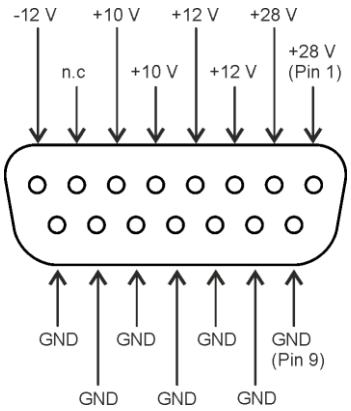

Figure 9-32: Pin Assignment R&S OSP-B158 *SUPPLY*

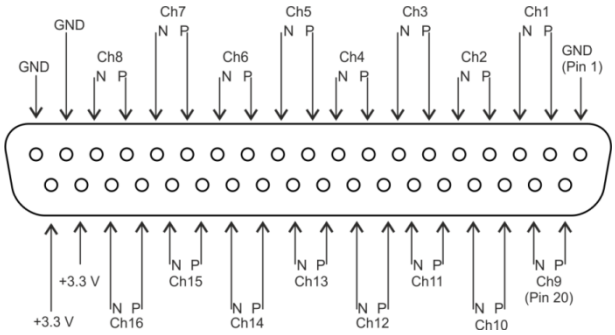

Figure 9-33: Pin Assignment R&S OSP-B158 *OUT*

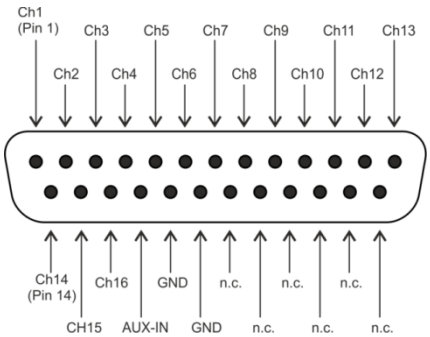

Figure 9-34: Pin Assignment R&S OSP-B158 *IN*

9.2.24 R&S OSP-B133 Interface

The module R&S OSP-B133 occupies one slot in the R&S OSP. It contains one SP6T relay with N-connectors.

The relay is directly accessible at the module's front panel. There are no additional RF cables inside the module.
Here is a picture of the R&S OSP-B133:

The following drawing shows the pinout. All RF connectors are N female type.

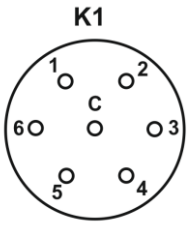

Figure 9-35: Layout RF Connectors of R&S OSP-B133

9.2.25 R&S OSP-B122H Interface

The module R&S OSP-B122H occupies one slot in the R&S OSP. It contains one SP6T relay with 2.92 (K) connectors.

The relay is directly accessible at the module's front panel. There are no additional RF cables inside the module.
Here is a picture of the R&S OSP-B122H:

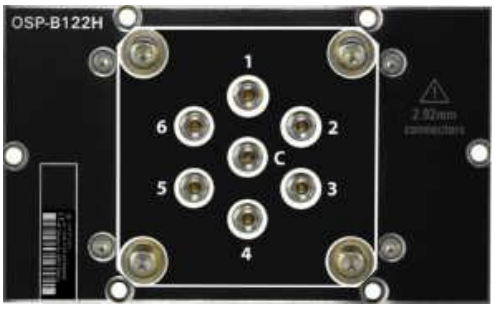

The following drawing shows the pinout. All RF connectors are 2.92 mm K female type.

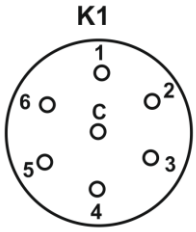

Figure 9-36: Layout RF Connectors of R&S OSP-B122H

Ensure that the correct connectors are used:

OSP-B122H: PC 2.92 mm connectors
Use a torque wrench (90 Ncm) to screw on and unscrew the RF connectors.

9.2.26 R&S OSP-B112UL Interface

The module R&S OSP-B112UL occupies one slot in the R&S OSP. It contains one SP6T relay with 2.4 connectors.

The relay is directly accessible at the module's front panel. There are no additional RF cables inside the module.
Here is a picture of the R&S OSP-B112UL:

The following drawing shows the pinout. All RF connectors are PC 2.4 mm female type.

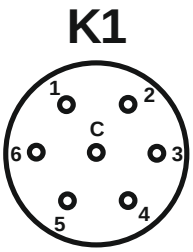

Figure 9-37: Layout RF Connectors of R&S OSP-B112UL

Ensure that the correct connectors are used:

OSP-B112UL: PC 2.4 mm connectors
Use a torque wrench (90 Ncm) to screw on and unscrew the RF connectors.

10 Index